VOID

DRAINAGE DATA

DRAINAGE AREA ---------- 38 SQ MI

FLOOD FREQUENCY	TOTAL DISCHARGE	MEAN VELOCITY	AREA OF OPENING UNDER FLOOD STAGE	BACKWATER
50 YR	3796 CFS	1.53 FPS	2481 SQ FT	0.04 FT
100 YR	3876 CFS	1.42 FPS	2739 SQ FT	0.03 FT
500 YR	5547 CFS	1.90 FPS	2926 SQ FT	0.05 FT

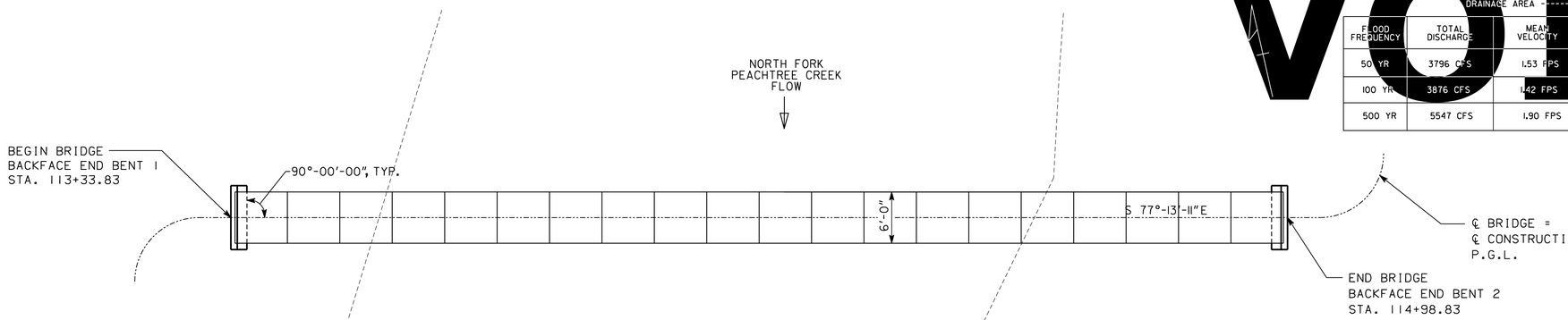

PLAN
SCALE: 1" = 10'-0"

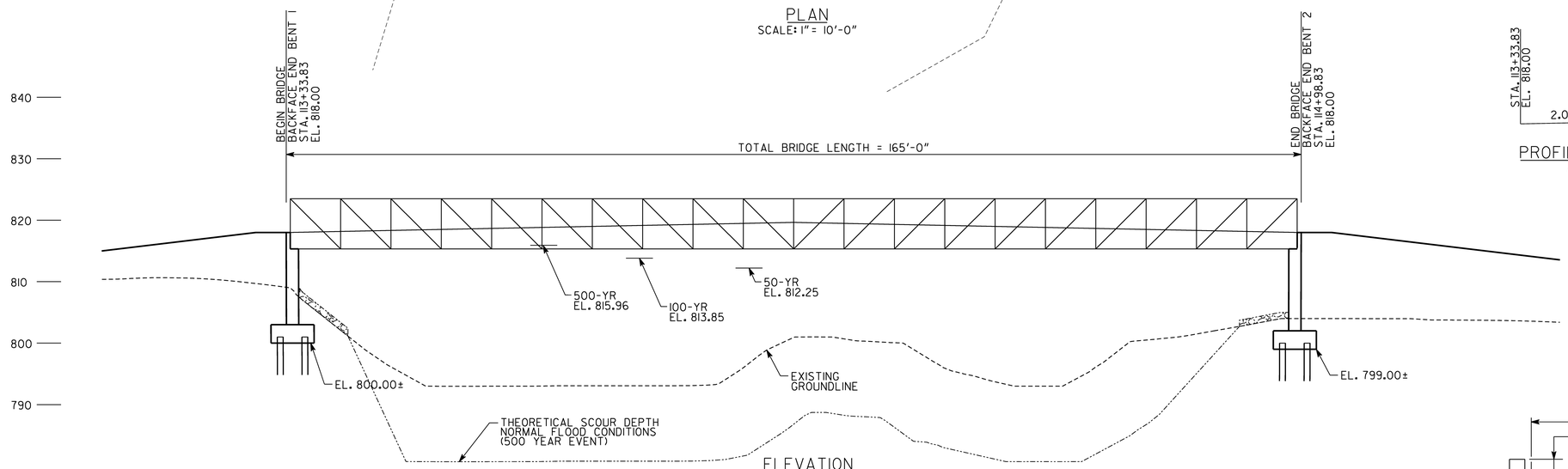

ELEVATION
SCALE: 1" = 10'-0"
HANDRAIL NOT SHOWN FOR CLARITY.

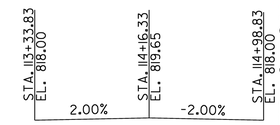

PROFILE GRADE DATA
ALONG ℄ BRIDGE

RELEASED FOR CONSTRUCTION
FEBRUARY 28, 2012

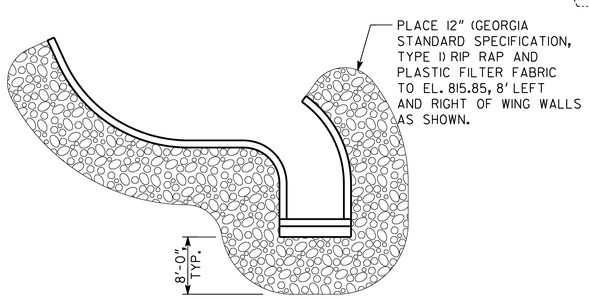

RIP RAP PLAN

NOTES:

1. ALL BENTS ARE PARALLEL
2. THE PROPOSED BRIDGE WILL HAVE A FLAT CROSS SLOPE
3. BRIDGE ELEVATIONS AND STATIONS SHOWN ARE ALONG ℄ PATH AT TOP OF DECK
4. MINIMUM BOTTOM OF BRIDGE ELEVATION 814.85
5. PRE-ENGINEERED BRIDGE SHALL BE ASTM A588 (WEATHERING STEEL).

BRIDGE CONSISTS OF

1 - 165'-0" X 6'-0" PRE-ENGINEERED STEEL TRUSS SPAN - SPECIAL DESIGN
2 - CAST-IN-PLACE CONCRETE END BENTS ---------- SPECIAL DESIGN

THEORETICAL SCOUR DEPTH (FT)						
	100-YR STORM			500-YR STORM		
	GENERAL	LOCAL	TOTAL	GENERAL	LOCAL	TOTAL
BRIDGE OPENING	1.07	0.00'	1.07'	12.48'	0.00'	12.48'

DESIGN DATA

SPECIFICATIONS ---------- AASHTO 17TH EDITION 2002
(DESIGNED FOR SEISMIC PERFORMANCE CATEGORY A)

PEDESTRIAN LOADING ---------- 85 PSF

ALTERNATE VEHICLE LOADING ----- 5 TON MAXIMUM LOAD

CONCRETE ---------- CLASS A, f'_c = 3500 PSI

REINFORCEMENT STEEL ----- GRADE 60, f_y = 60,000 PSI

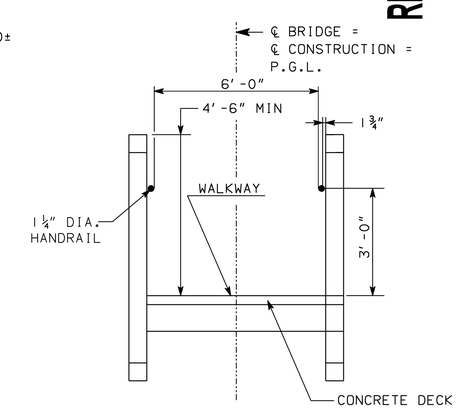

TYPICAL BRIDGE SECTION
NO SCALE

PROPERTY AND EXISTING R/W LINE
REQUIRED R/W LINE
CONSTRUCTION LIMITS
EASEMENT FOR CONSTR & MAINTENANCE OF SLOPES
EASEMENT FOR CONSTR OF SLOPES
EASEMENT FOR CONSTR OF DRIVES

BEGIN LIMIT OF ACCESS.....BLA
END LIMIT OF ACCESS.....ELA
LIMIT OF ACCESS
REQ'D R/W & LIMIT OF ACCESS

Archer Western Contractors

Heath & Lineback Engineers
INCORPORATED
2390 CANTON ROAD, BUILDING 200
MARIETTA, GEORGIA 30066-5393
(770)424-1668

SCALE IN FEET
0 10 20 40

SCALE: 1" = 10'-0"

REVISION DATES

STATE OF GEORGIA
DEPARTMENT OF TRANSPORTATION
OFFICE: Innovative Program Delivery

PEDSTRIAN BRIDGE 2
PLAN & ELEVATION

S.R. 400/ I-85
CONNECTOR RAMPS

DRAWING No. 29-032

3/1/2007 GPLN