STATE	PROJECT NUMBER	SHEET NO.	TOTAL SHEETS
GA.	NH000-0085-02(153)	271	480

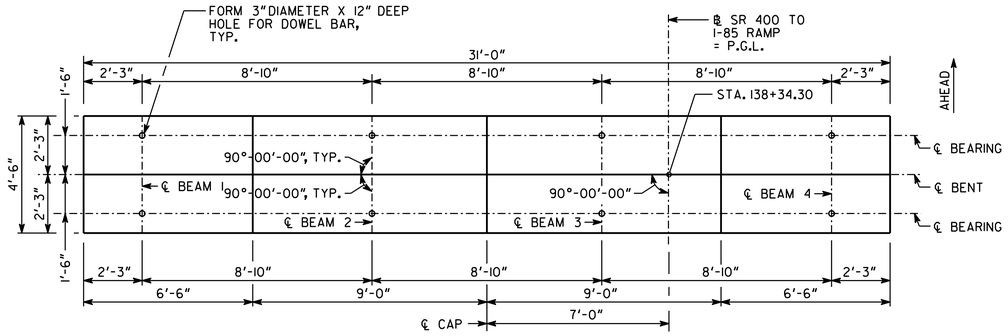

PLAN

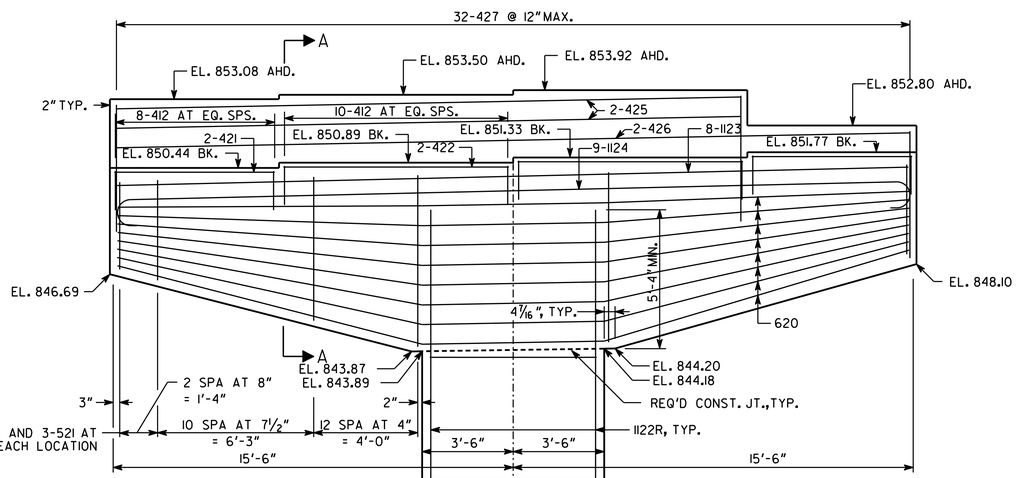

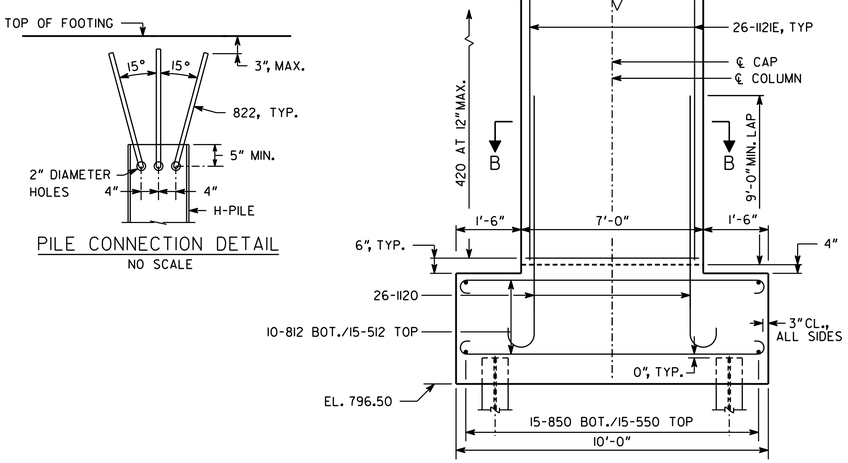

PILE CONNECTION DETAIL
NO SCALE

ELEVATION
(LOOKING AHEAD)

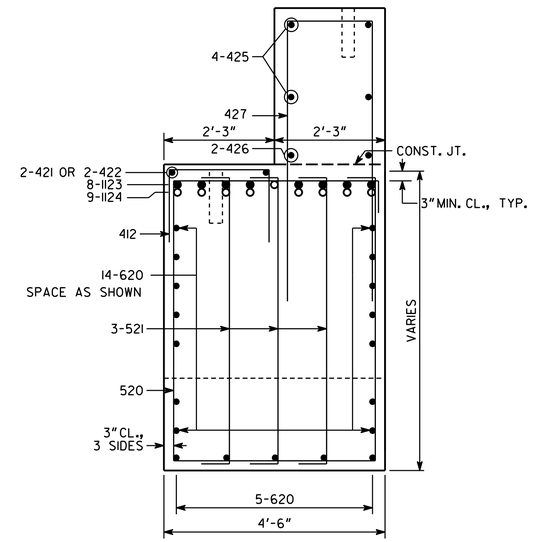

SECTION A-A
NO SCALE

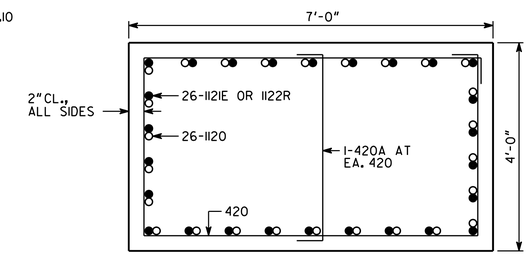

SECTION B-B
NO SCALE

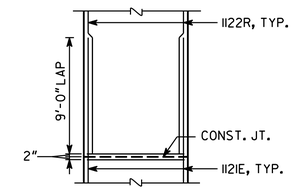

COLUMN CONSTRUCTION JOINT DETAIL
NO SCALE

PROVIDE CONSTRUCTION JOINTS AT THE FOLLOWING LOCATIONS:

ELEV.

831.00

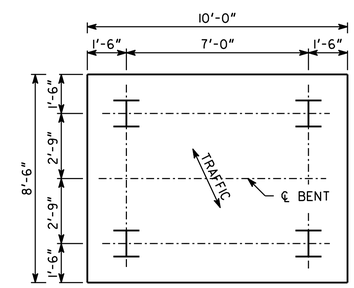

PILE LAYOUT
NO SCALE

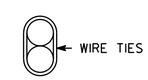

BARS TO BE BUNDLED SHALL BE BUNDLED VERTICALLY

BUNDLING DETAIL
NO SCALE

NOTES:
1. MAINTAIN 2"CL. ON ALL REINFORCEMENT UNLESS OTHERWISE NOTED.
2. * AT CONTRACTOR'S OPTION CONSTRUCTION JOINT MAY BE RELOCATED TO TOP OF FOOTING.

ALL PILES SHALL BE STEEL H, HP 14 X 117

PLAN DRIVING OBJECTIVE

ALL PILES SHALL BE DRIVEN TO A DRIVING RESISTANCE OF 284 TONS AFTER A MINIMUM TIP ELEVATION OF 784 IS ACHIEVED.

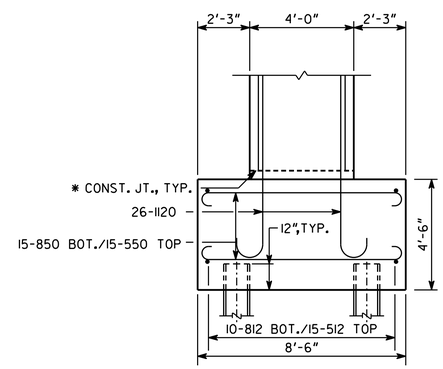

SIDE ELEVATION

SUBSTRUCTURE QUANTITIES	
ITEM	BENT 21
CU YD CLASS "AA" CONCRETE	94.7
LB BAR REINFORCEMENT STEEL	18400

BRIDGE NO. 4

GEORGIA
DEPARTMENT OF TRANSPORTATION
ENGINEERING DIVISION-OFFICE OF BRIDGES AND STRUCTURES

INTERMEDIATE BENT 21
SR 400 SOUTHBOUND TO I-85 NORTHBOUND FLYOVER
SR 400/I-85 CONNECTOR RAMPS
FULTON COUNTY NH000-0085-02(153)

AS-BUILT

DRAWING NO. 35.4 -39	REVISIONS	BY	DATE
BRIDGE SHEET 39 OF 50			

NOT TO SCALE — MARCH 2012

DESIGNED BCB/GBL — CHECKED MS/KAK — REVIEWED
DRAWN DB/BCB — DESIGN GROUP — APPROVED

J:/2011026/BRIDGE/BRIDGE 4/4-38_IBT 21.DGN