STATE	PROJECT NUMBER	SHEET NO.	TOTAL SHEETS
GA.	NH000-0085-02(153)	263	480

BENT	BACK SPAN EL. A	BACK SPAN EL. B	BACK SPAN EL. C	BACK SPAN EL. D	AHEAD SPAN EL. F	AHEAD SPAN EL. G	AHEAD SPAN EL. H	AHEAD SPAN EL. J	EL. L	EL. M	EL. NL	EL. NR	EL. PL	EL. PR	EL. Q	STA.	AA	AB	AC	AD	BA	BB	BC	BD	CA	CB	R	T	U	V	W	X	Y	Z	PILE LAYOUT	MIN. TIP EL.	AE	AF
2	874.36	874.89	875.42	875.95	874.77	875.30	875.83	876.36	870.59	872.28	867.87	867.89	868.25	868.27	844.50	112+31.55	2'-2 13/16"	8'-10 1/8"	2'-2 13/16"	0 13/16"	2'-2 3/4"	8'-10 3/16"	2'-2 11/16"	1 1/16"	87°-23'-52"	86°-41'-22"	2	4'-6"	2'-0"	2'-6"	9'-0"	6'-0"	11'-0"	8'-0"	5	810	18-820 BOT./15-522 TOP	10-821 BOT./15-523 TOP
3	877.23	877.77	878.30	878.83	877.32	877.85	878.38	878.91	873.47	875.16	870.75	870.77	871.13	871.14	848.50	113+46.55	2'-2 13/16"	8'-10 1/8"	2'-2 13/16"	0 13/16"	2'-2 13/16"	8'-10 1/8"	2'-2 13/16"	0 13/16"	87°-23'-52"	87°-23'-52"	3	3'-6"	1'-9"	2'-0"	8'-0"	5'-0"	10'-6"	7'-6"	4	818	16-830 BOT./15-530 TOP	8-831 BOT./15-531 TOP
4	880.97	881.50	882.03	882.56	881.09	881.62	882.15	882.68	877.20	878.90	874.48	874.50	874.86	874.88	837.50	114+61.55	2'-2 13/16"	8'-10 1/8"	2'-2 13/16"	0 13/16"	2'-2 13/16"	8'-10 1/8"	2'-2 13/16"	0 13/16"	87°-23'-52"	87°-23'-52"	3	3'-6"	1'-9"	2'-0"	8'-0"	5'-0"	10'-6"	7'-6"	4	818	16-830 BOT./15-530 TOP	8-831 BOT./15-531 TOP
7	899.13	899.66	900.19	900.72	899.45	899.98	900.51	901.04	895.36	897.05	892.64	892.66	893.02	893.04	854.50	118+75.55	2'-2 3/4"	8'-10 3/16"	2'-2 11/16"	1"	2'-2 3/4"	8'-10 3/16"	2'-2 11/16"	1"	86°-52'-38"	86°-52'-38"	6	4'-6"	3'-6"	2'-9"	9'-6"	6'-6"	14'-0"	11'-0"	5	802	23-860 BOT./15-560 TOP	29-870 BOT./15-570 TOP
8	905.22	905.75	906.28	906.81	905.47	906.00	906.53	907.06	901.45	903.15	898.73	898.75	899.11	899.13	862.00	120+13.55	2'-2 13/16"	8'-10 1/8"	2'-2 13/16"	0 13/16"	2'-2 3/4"	8'-10 3/16"	2'-2 11/16"	1"	87°-23'-52"	86°-52'-38"	4	4'-9"	1'-4 1/2"	2'-10 1/2"	9'-9"	6'-9"	9'-9"	6'-9"	5	790	23-880 BOT./15-580 TOP	8-880 BOT./15-580 TOP
13	897.38	897.91	898.44	898.97	896.88	897.41	897.94	898.47	893.11	894.80	890.39	890.41	890.77	890.79	825.50	127+32.30	2'-2 3/4"	8'-10 3/16"	2'-2 11/16"	1"	2'-2 3/4"	8'-10 3/16"	2'-2 11/16"	1"	86°-52'-58"	86°-52'-58"	9	5'-3"	3'-6"	3'-6"	11'-0"	8'-0"	14'-0"	11'-0"	6	812	26-821 BOT./15-523 TOP	33-870 BOT./15-570 TOP
14	888.80	889.33	889.86	890.39	889.00	889.53	890.06	890.59	885.03	886.72	882.31	882.33	882.69	882.71	822.50	128+70.05	2'-2 7/8"	8'-10 1/16"	2'-2 15/16"	0 3/4"	2'-2 3/4"	8'-10 3/16"	2'-2 11/16"	1"	87°-36'-09"	86°-52'-58"	2	5'-0"	3'-3"	3'-6"	11'-0"	8'-0"	13'-6"	10'-6"	6	809	25-821 BOT./15-523 TOP	29-814 BOT./15-514 TOP
18	859.21	859.67	860.12	860.58	859.28	859.74	860.19	860.65	855.45	856.92	852.65	852.67	852.98	852.99	795.50	134+21.05	2'-3"	8'-10"	2'-3"	0"	2'-3"	8'-10"	2'-3"	0 3/8"	90°-00'-00"	88°-52'-17"	6	4'-6"	3'-6"	2'-9"	9'-6"	6'-6"	14'-0"	11'-0"	5	784	23-860 BOT./15-560 TOP	29-870 BOT./15-570 TOP
19	855.77	856.21	856.65	857.09	855.89	856.34	856.78	857.22	852.02	853.42	849.19	849.21	849.51	849.52	795.50	135+58.80	2'-3"	8'-10"	2'-3"	0"	2'-3"	8'-10"	2'-3"	0"	90°-00'-00"	90°-00'-00"	6	4'-6"	3'-6"	2'-9"	9'-6"	6'-6"	14'-0"	11'-0"	5	781	23-860 BOT./15-560 TOP	29-870 BOT./15-570 TOP

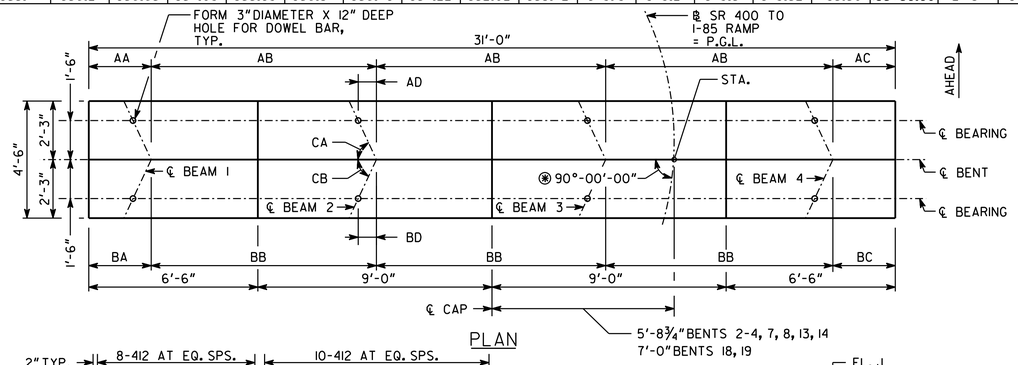

PLAN

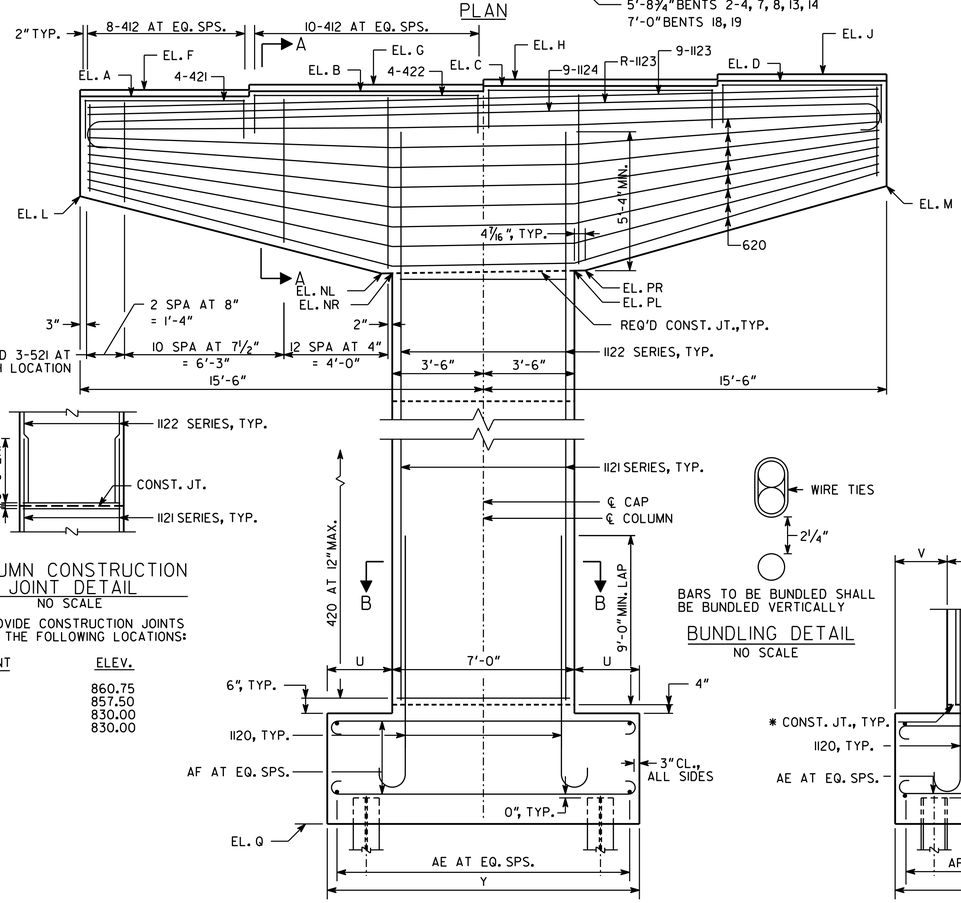

ELEVATION
(LOOKING AHEAD)

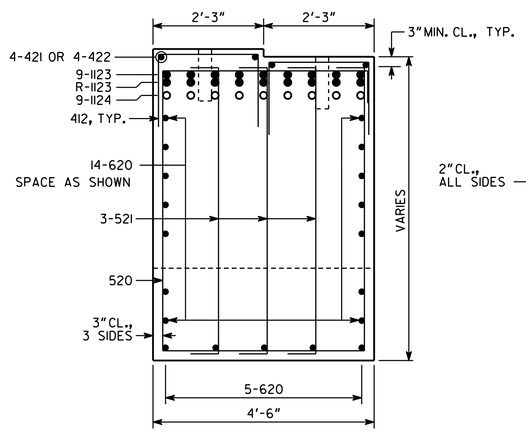

SECTION A-A
NO SCALE

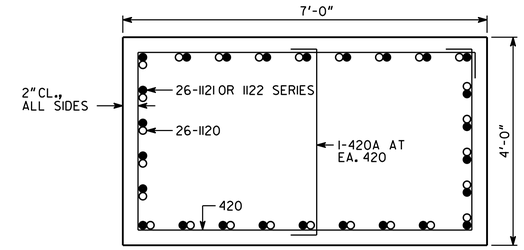

SECTION B-B
BENTS 2, 3, 4, 7, 8, 18 & 19
NO SCALE

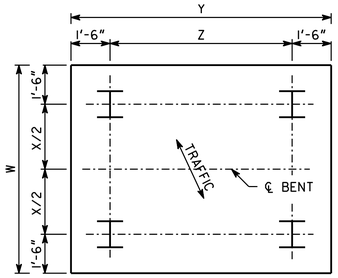

PILE LAYOUT 4
NO SCALE

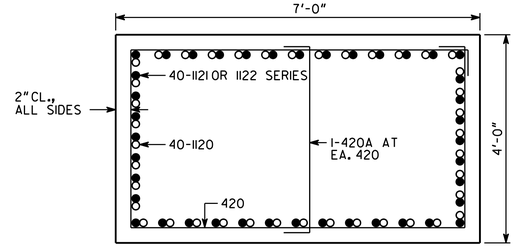

SECTION B-B
BENTS 13 & 14
NO SCALE

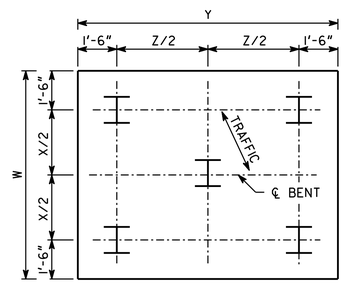

PILE LAYOUT 5
NO SCALE

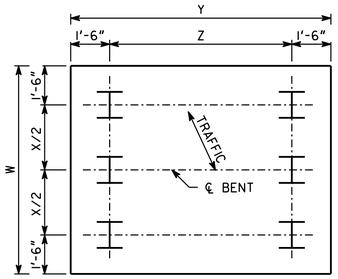

PILE LAYOUT 6
NO SCALE

ALL PILES SHALL BE STEEL H, HP 14 X 117

PLAN DRIVING OBJECTIVE

ALL PILES SHALL BE DRIVEN TO A DRIVING RESISTANCE OF 284 TONS AFTER A MINIMUM TIP ELEVATION OF (SEE TABLE) IS ACHIEVED.

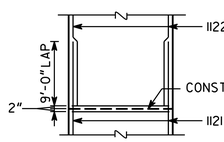

COLUMN CONSTRUCTION JOINT DETAIL
NO SCALE

PROVIDE CONSTRUCTION JOINTS AT THE FOLLOWING LOCATIONS:

BENT	ELEV.
13	860.75
14	857.50
18	830.00
19	830.00

BARS TO BE BUNDLED SHALL BE BUNDLED VERTICALLY

BUNDLING DETAIL
NO SCALE

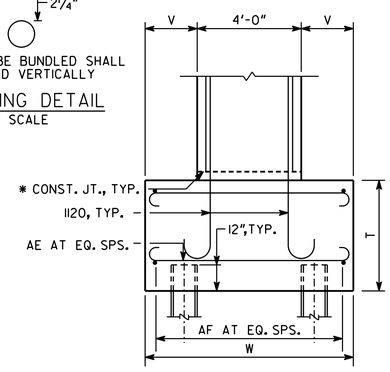

SIDE ELEVATION

NOTES:
1. MAINTAIN 2" CL. ON ALL REINFORCEMENT UNLESS OTHERWISE NOTED.
2. (*) ANGLE IS MEASURED FROM TANGENT ON ℄ SR 400 TO I-85 RAMP AT ℄ BENT.
3. * AT CONTRACTOR'S OPTION CONSTRUCTION JOINT MAY BE RELOCATED TO TOP OF FOOTING.

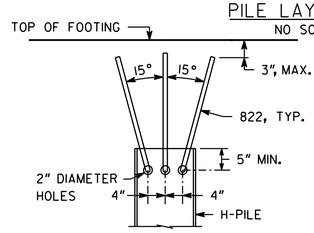

PILE CONNECTION DETAIL
NO SCALE

SUBSTRUCTURE QUANTITIES

ITEM	BENT 2	BENT 3	BENT 4	BENT 7	BENT 8
CU YD CLASS "AA" CONCRETE	67.4	60.8	76.2	88.2	81.3
LB BAR REINFORCEMENT STEEL	13924	13766	16048	17939	16491
	BENT 13	BENT 14	BENT 18	BENT 19	
CU YD CLASS "AA" CONCRETE	123.4	115.1	107.2	103.7	
LB BAR REINFORCEMENT STEEL	31001	28479	22184	21642	

REVISIONS	BY	DATE
BENT 18 ANGLE	BKA	5-15-2012

AS-BUILT

BRIDGE NO. 4

GEORGIA
DEPARTMENT OF TRANSPORTATION
ENGINEERING DIVISION-OFFICE OF BRIDGES AND STRUCTURES

INTERMEDIATE BENTS 2-4, 7, 8, 13, 14, 18, 19
SR 400 SOUTHBOUND TO I-85 NORTHBOUND FLYOVER
SR 400/I-85 CONNECTOR RAMPS
FULTON COUNTY NH000-0085-02(153)

NOT TO SCALE MARCH 2012

DRAWING NO. 35.4 -32
BRIDGE SHEET 32 OF 50

DESIGNED BCB/GBL CHECKED MS/KAK REVIEWED
DRAWN DB/BCB DESIGN GROUP APPROVED

J:20110026/BRIDGE/BRIDGE4/4-32_IBT 4X4-BEAM.DGN