STATE	PROJECT NUMBER	SHEET NO.	TOTAL SHEETS
GA.	NH000-0085-02(153)	247	480

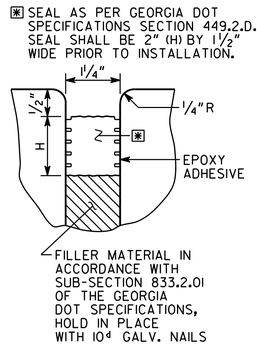

SECTION THROUGH JOINT AT BENT 1

JOINT OPENING	
TEMPERATURE (°F)	W (IN.)
30	2¼"
60	1½"
90	0¾"

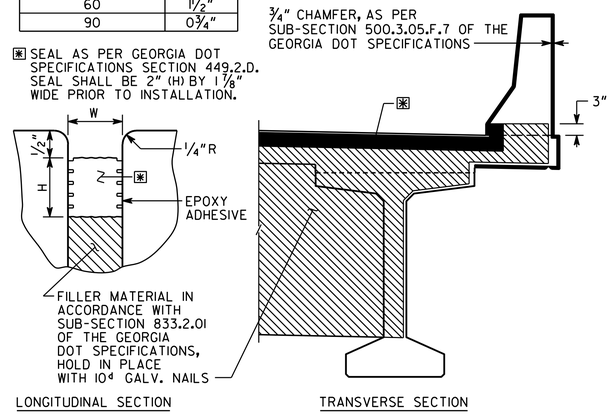

BENTS 3, 5, 7, 9, 11, 13, 15, 17 & 19
EXPANSION JOINT DETAILS

JOINT OPENING	
TEMPERATURE (°F)	W (IN.)
30	1½"
60	1"
90	0½"

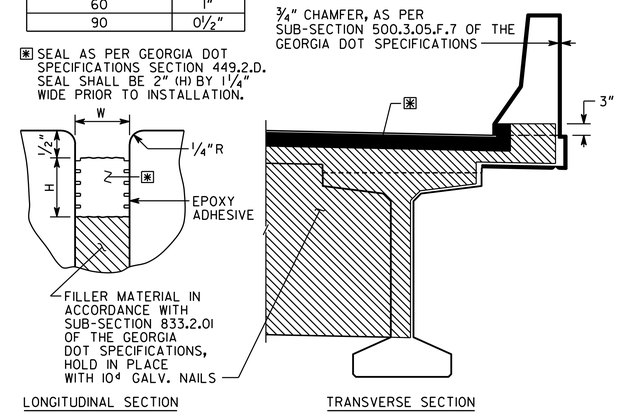

BENT 21 EXPANSION JOINT DETAILS

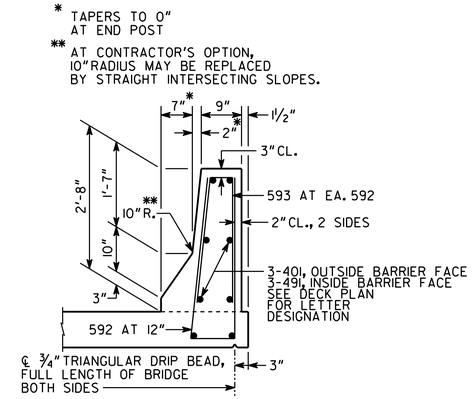

BARRIER DETAIL

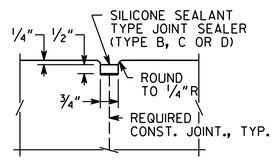

DETAIL "A"

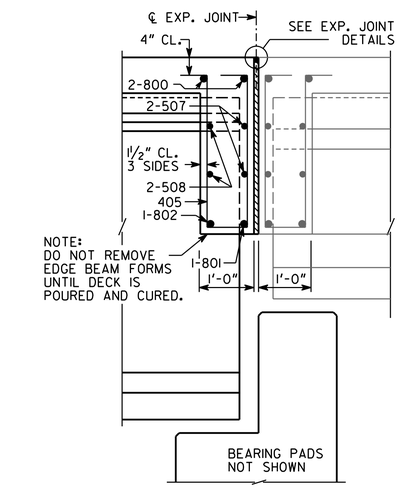

SLAB REINFORCEMENT NOT SHOWN

SECTION THRU EDGE BEAM

BENT 21

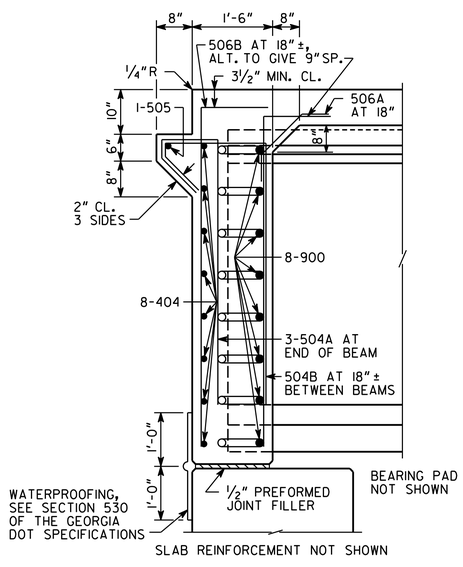

SLAB REINFORCEMENT NOT SHOWN

SECTION AT ENDWALL

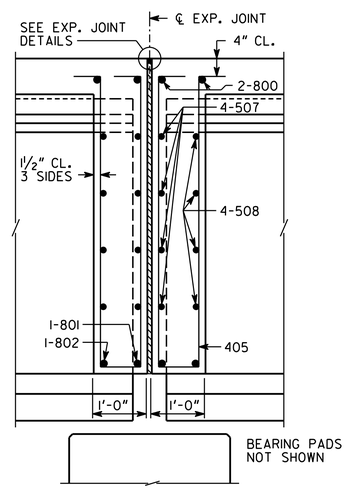

SLAB REINFORCEMENT NOT SHOWN

SECTION THRU EDGE BEAM

BENTS 3,5,7,9,11,13,15,17,19&21

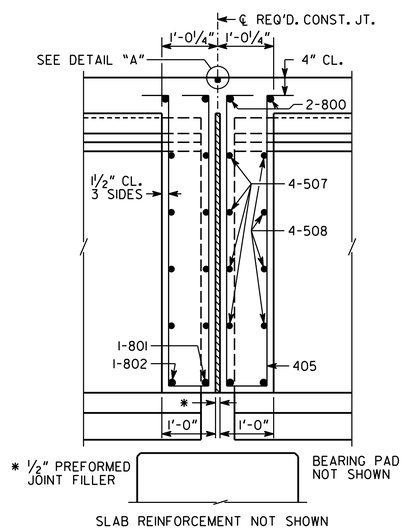

SLAB REINFORCEMENT NOT SHOWN

SECTION THRU EDGE BEAM

BENTS 2,4,6,8,10,12,14,16,18&20

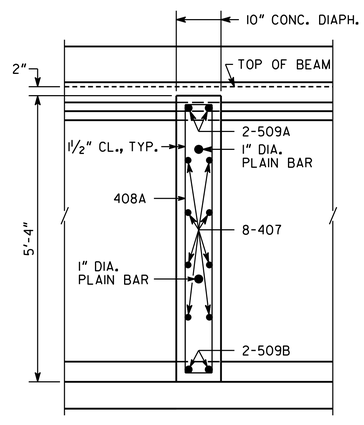

SLAB REINFORCEMENT NOT SHOWN

SECTION THRU DIAPHRAGM

BRIDGE NO. 4

GEORGIA
DEPARTMENT OF TRANSPORTATION
ENGINEERING DIVISION-OFFICE OF BRIDGES AND STRUCTURES

MISCELLANEOUS DETAILS
SR 400 SOUTHBOUND TO I-85 NORTHBOUND FLYOVER
SR 400/I-85 CONNECTOR RAMPS
FULTON COUNTY NH000-0085-02(153)

AS-BUILT

DRAWING NO. 35.4 - 16

BRIDGE SHEET 16 OF 50

BY	REVISIONS	DATE

SCALE: NO SCALE MARCH 2012

DESIGNED BCB/GBL CHECKED MS/KAK REVIEWED
DRAWN DB/BCB DESIGN GROUP APPROVED

J:2011026/BRIDGE/BRIDGE4/4-16_MISC.DGN