STATE	PROJECT NUMBER	SHEET NO.	TOTAL SHEETS
GA.	NH000-0085-02(153)	194	480

* DIMENSIONS ARE MEASURED ALONG INSIDE FACE OF BARRIER.

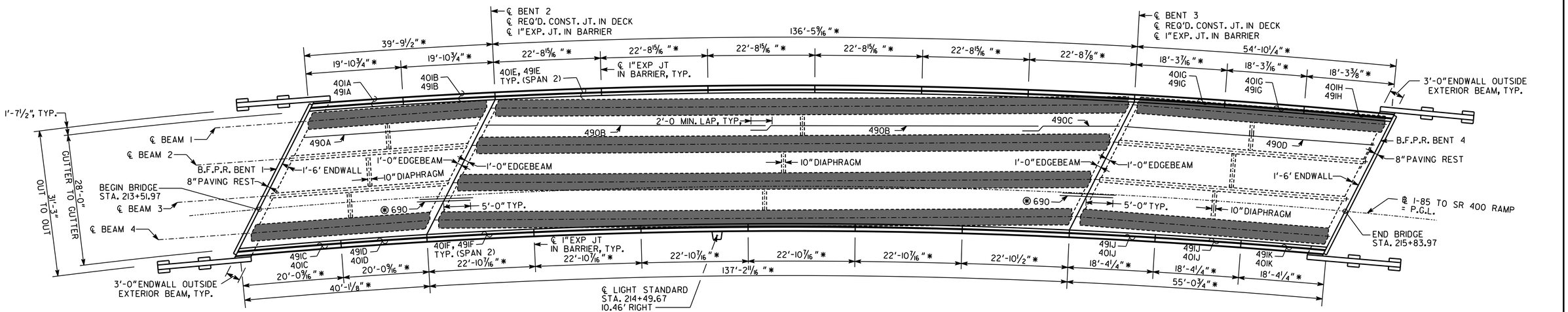

SPAN 1 SPAN 2 SPAN 3

⊛ SEAL AS PER GEORGIA DOT SPECIFICATIONS SECTION 449.2.D SEAL SHALL BE 2"(H) BY 1½" WIDE PRIOR TO INSTALLATION.

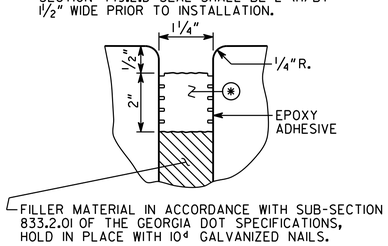

BENTS 1 & 4 EXP. JOINT DETAILS

NO SCALE

** AT CONTRACTOR'S OPTION, 10"RADIUS MAY BE REPLACED BY STRAIGHT INTERSECTING SLOPES.

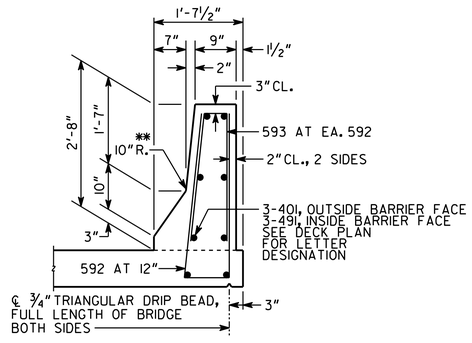

BARRIER DETAIL

NO SCALE

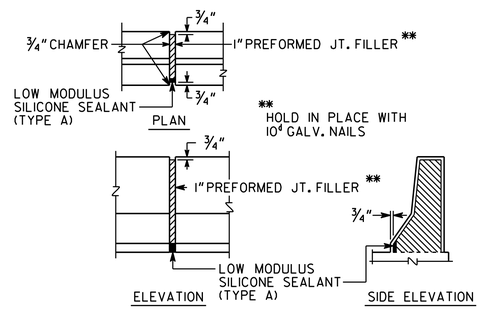

DETAILS OF 1"EXPANSION JOINT IN BARRIER

NO SCALE

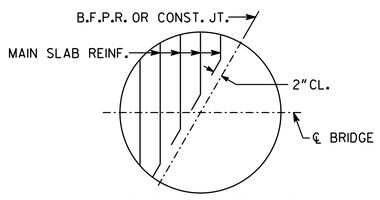

AT B.F.P.R. OR CONST. JOINT

BARS ARE DETAILED IN BAR DETAILS AS EQUIVALENT FULL LENGTH BARS.

BAR BENDING DETAILS AT SKEWED JOINTS

NO SCALE

SUPERSTRUCTURE QUANTITIES

ITEM	SPAN 1	SPAN 2	SPAN 3	TOTAL
LUMP - CY SUPERSTR. CONCRETE, CLASS "AA"	50.3	128.9	63.9	243.1
LUMP - LB SUPERSTR. REINF. STEEL	6342	13788	7822	27952
LUMP - LB EPOXY COATED SUPERSTR. REINF. STEEL	5552	16361	7181	29094

⊛ 690 BAR QUANTITIES ARE INCLUDED IN END SPANS.
ALL 90 SERIES BARS SHALL BE EPOXY COATED.

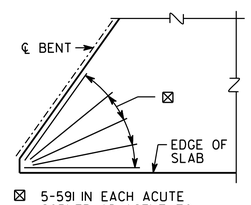

⊠ 5-591 IN EACH ACUTE CORNER ADJACENT TO INTERMEDIATE BENTS, TYP.

SKEWED CORNER DETAIL

NO SCALE

AS-BUILT

DRAWING NO. 35.2 - 3

BRIDGE SHEET 3 OF 21

BY	REVISIONS	DATE

PROJECT P.I. NO. 736880

BRIDGE NO.2

GEORGIA
DEPARTMENT OF TRANSPORTATION
ENGINEERING DIVISION-OFFICE OF BRIDGES AND STRUCTURES

DECK PLAN
I-85 SOUTHBOUND TO SR 400 NORTHBOUND
OVER BUFORD HIGHWAY
SR 400/I-85 CONNECTOR RAMPS
FULTON COUNTY NH000-0085-02(153)

SCALE: 1"= 10'-0" FEBRUARY 2012

DESIGNED BKA CHECKED MS/KAK REVIEWED
DRAWN DRB DESIGN GROUP APPROVED

1 INCH WHEN PRINTED FULL SIZE

J:/2011026/BRIDGE/BRIDGE2/2-3_DP.DGN