STATE	PROJECT NUMBER	SHEET NO.	TOTAL SHEETS
GA.	NH000-0085-02(153)	175	480

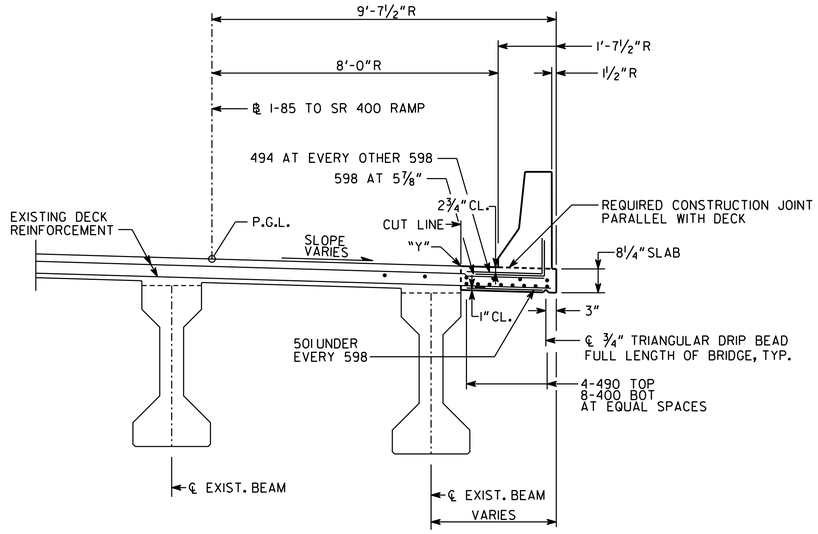

SECTION THRU SLAB

NOTES:

1. CUT LINE SHALL BE VERTICAL SAW CUT 1"DEEP.
2. R DENOTES RADIAL DIMENSION.
3. LAP 501 AND 598 BARS A MINIMUM OF 2'-6" WITH EXISTING REINFORCEMENT. USE MECHANICAL COUPLERS WHERE MINIMUM LAP DISTANCE IS NOT POSSIBLE.
4. "Y" IS ELEVATION AT TOP OF EXISTING EDGE OF DECK AT CUT LINE TO BE DETERMINED BY THE CONTRACTOR AT EVERY ℄ BENT AND B.F.P.R. THESE ELEVATIONS SHALL BE USED TO DETERMINE THE REQUIRED BENT ELEVATIONS.
5. MAINTAIN 2"CL. ON ALL REINFORCEMENT UNLESS OTHERWISE NOTED.
6. MATCH EXISTING SLOPE FOR WIDENED SECTION.

BRIDGE NO. 1

GEORGIA
DEPARTMENT OF TRANSPORTATION
ENGINEERING DIVISION-OFFICE OF BRIDGES AND STRUCTURES

DECK SECTION - SPAN IN
I-85 SOUTHBOUND TO SR 400 NORTHBOUND
SR 400/I-85 CONNECTOR RAMPS OVER LENOX ROAD AND NORTH FORK PEACHTREE CREEK
FULTON COUNTY
NH000-0085-02(153)

AS-BUILT

DATE	REVISIONS	BY

DRAWING NO. 35.1 - 5

BRIDGE SHEET 5 OF 20

SCALE: ½" = 1'-0"

FEBRUARY 2012

DESIGNED BKA | CHECKED GBL | REVIEWED
DRAWN BRW | DESIGN GROUP | APPROVED

J:2011026/BRIDGE1/I-5_DS SPAN IN.DGN

1 INCH WHEN PRINTED FULL SIZE