STATE	PROJECT NUMBER	SHEET NO.	TOTAL SHEETS
GA.	STP00-2868-00(001)	149	258

CATCH BASIN (IF CATCH BASIN HAS LONG LONGITUDINAL PIPE OVER 24", SEE DETAILS AT RIGHT)

NOTE: OPENING FOR PIPE SHALL BE THE OUTSIDE DIAMETER OF THE REQUIRED PIPE PLUS 1" MINIMUM OPENING SHALL HAVE CORRUGATIONS.

5- #3 BARS @ 3" CENTERED OVER PEDISTAL LENGTH W1+ 4'-8"

NOTE FOR ALL CATCH BASINS

1/2" EXPANSION JOINT MATERIAL SHALL BE PLACED AROUND THE CATCH BASIN WHERE SIDEWALK OR MEDIAN PAVEMENT IS PLACED ADJACENT TO THE CATCH BASIN

5- #3 BARS @ 3" CENTERED OVER PEDISTAL LENGTH 2'- 10 1/2".

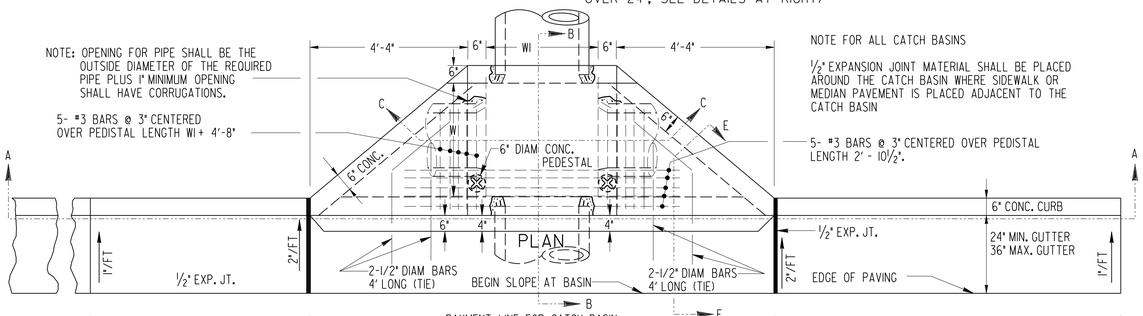

PAYMENT LINE FOR CATCH BASIN W1+ 9'-8"

CATCH BASIN INCLUDED ALL QUANTITIES BETWEEN THESE LINES EXCEPT ADDITIONAL DEPTH FOR BASIN

3'-0" MINIMUM-TRANSITION CURB HEIGHT & GUTTER SLOPE

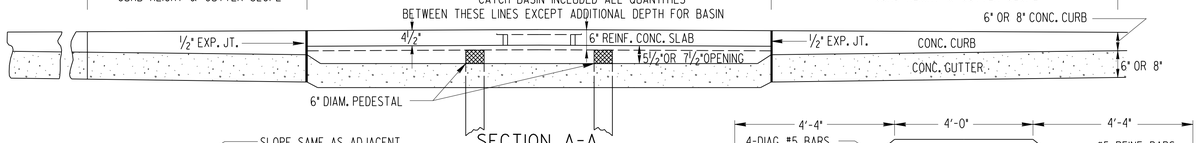

SECTION A-A

CATCH BASIN (TYPICAL FOR CATCH BASIN WITH LONGITUDINAL PIPE OVER 24".)

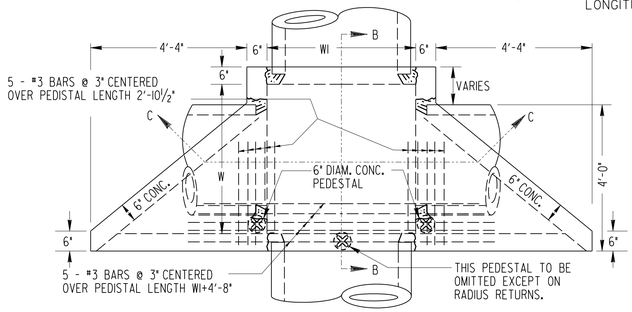

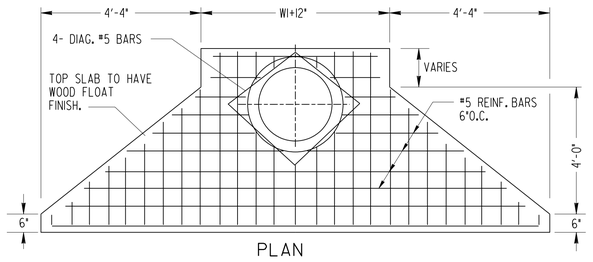

PLAN

TOP SLAB FOR CATCH BASINS

ELEVATION SCALE: 1/2" = 1'

1 1/2" FACE CONC. TO CENTERLINE OF STEEL

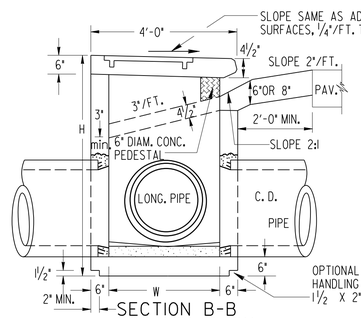

SECTION B-B FOR MIN. HEIGHT

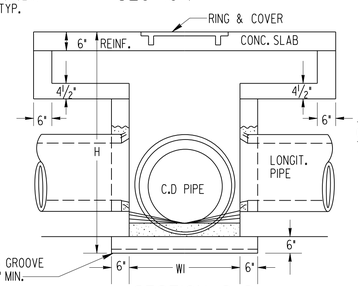

SECTION C-C FOR MIN. HEIGHT

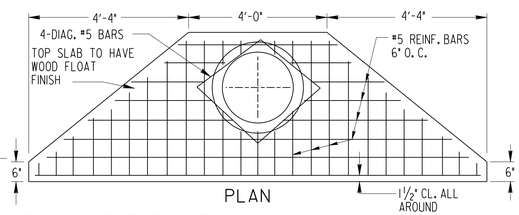

PLAN

TOP SLAB FOR CATCH BASINS

ELEVATION SCALE: 1/2" = 1'

1 1/2" FACE CONC. TO CENTERLINE OF STEEL

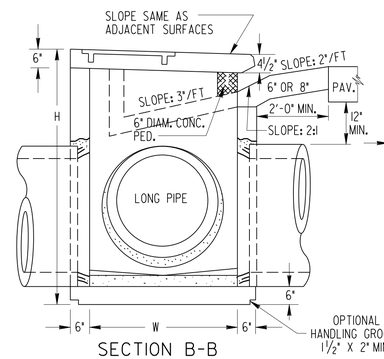

SECTION B-B

SCALE: 1/2" = 1'

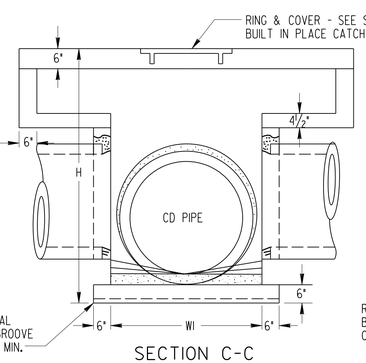

SECTION C-C

SCALE: 1/2" = 1'

REINFORCING - ISOMETERIC VIEW

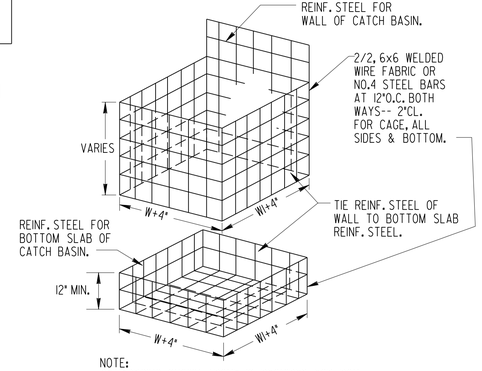

NOTE:
REINFORCING SHOWN ABOVE IS REQUIRED FOR BOX SHAPED BASIN. REINFORCING FOR CIRCULAR PRECAST ALTERNATE SHALL BE ACCORDING TO STD. 1040.

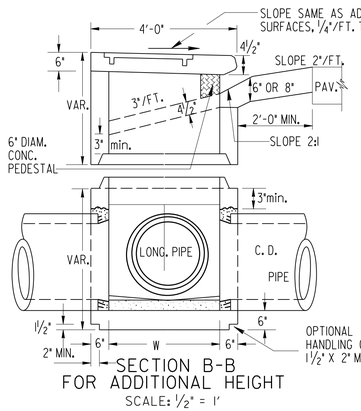

SECTION B-B FOR ADDITIONAL HEIGHT

SCALE: 1/2" = 1'

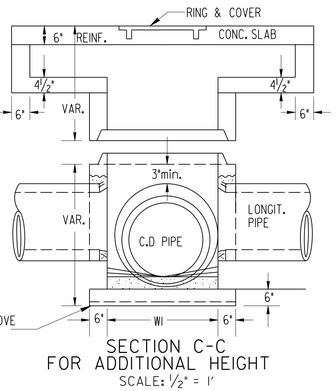

SECTION C-C FOR ADDITIONAL HEIGHT

SCALE: 1/2" = 1'

DETAIL AND ARRANGEMENT OF LADDER BARS

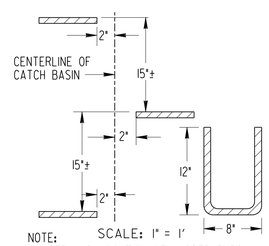

SCALE: 1" = 1'

NOTE:
NUMBER AND LOCATION OF LADDER BARS IN CATCH BASIN TO BE AS DIRECTED BY THE ENGINEER.
M.H. STEPS LISTED IN GA. D.O.T. LABORATORY'S QUALIFIED PRODUCTS LIST MAY BE SUBSTITUTED.

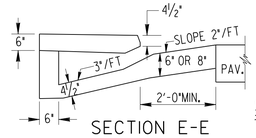

SECTION E-E

SCALE: 1/2" = 1'

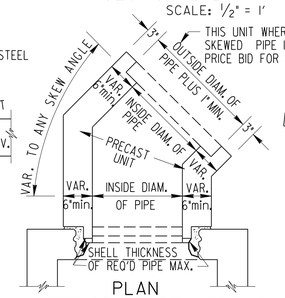

PLAN

A METHOD OF CONNECTING SKEWED PIPE

TYPICAL ISOMETERIC VIEW

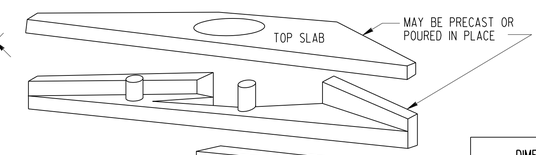

ALL JOINTS BETWEEN PRECAST RISERS OR BETWEEN PRECAST BASE AND RISER WILL BE KEYED. KEYED JOINTS SHOWN ARE TYPICAL AND MAY BE VARIED.

DIMENSIONS FOR CATCH BASIN		
PIPE SIZE	NORMAL W or W1	MIN. H
12"	3'-0"	4'-4"
15"	3'-0"	4'-7"
18"	3'-0"	4'-10"
24"	3'-0"	5'-6"
30"	3'-6"	6'-2"
36"	4'-0"	6'-10"
42"	5'-0"	7'-4"
48"	5'-0"	8'-0"
54"	6'-0"	8'-6"
60"	6'-0"	9'-2"

NOTE:
DIMENSIONS FOR CATCH BASIN ARE BASED UPON TYPICAL OUTSIDE DIAMETERS OF CONCRETE PIPES AND MAY BE VARIED IF CONDITIONS PERMIT AND THE ENGINEER APPROVES. W & W1 DIMENSIONS DO NOT HAVE TO BE EQUAL.

ALTERNATE:
BUILT-IN-PLACE PRECAST BOX, AND/OR PRECAST CIRCULAR UNITS WITH THE REQUIRED ADAPTERS, REDUCERS, FITTINGS, CONNECTIONNS, ETC. MAY BE USED IN COMBINATIONS.

NOTE:
FOR RING & COVER DETAILS AND OTHER DETAILS NOT SHOWN, SEE STANDARD 1034 D FOR BUILT-IN-PLACE CATCH BASIN.

METHOD OF CONNECTING PIPE

(WHERE CONNC. PIPE HAS TO BE OUT)

STEP 1:
CUT CONCRETE PIPE LEAVING APPROXIMATELY 3" OF REINFORCING MESH EXPOSED.

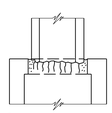

STEP 2:
POSITION PIPE APPROXIMATELY 3" INTO OPENIONG OF WALL.

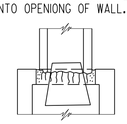

STEP 3:
POSITION CONICAL CONE INSIDE OF PIPE AND SEAL WITH GROUT. (1/2" MIN. THICKNESS OF GROUT). REMOVE CORE WHEN SET AND RUB GROUT TO SEAL JOINTS.

NO SCALE

IF THIS SWIVEL SECTION SLAB IS USED TO REDUCE THE W AND W1 DIMENSIONS, INCREASE THE MINIMUM THICKNESS TO 9" AND USE REINF. STEEL. SEE DETAIL BELOW.

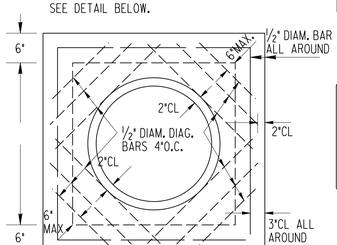

PLAN FOR REINF. STEEL

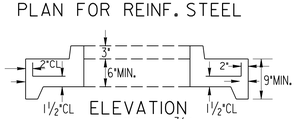

ELEVATION

SCALE: 3/4" = 1'

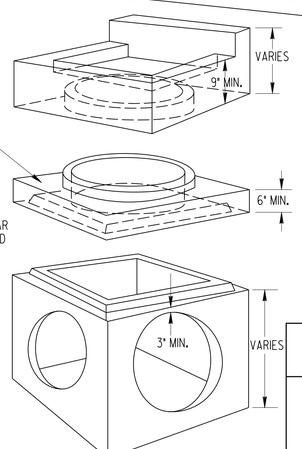

SWIVEL SECTION MAY BE USED WHERE SKEWED PIPE CONNECTS TO PRECAST CONCRETE BOX.

NO SCALE

NOTE:
THE ABOVE VIEW DEPICTS PRECAST BOX SEE SEPARATE STANDARDS FOR CIRCULAR ALTERNATE OR BUILT-IN-PLACE BOX.

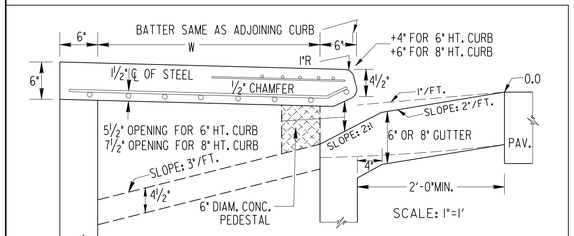

DETAIL OF TOP SLAB, REINF. STEEL & CLEARANCES REQ'D.

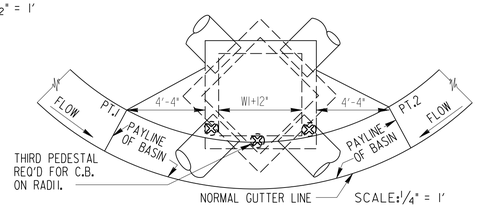

SWIVEL SECTION MAY BE USED WHERE SKEWED PIPE CONNECTS TO PRECAST CONCRETE BOX.
ALL DIMENSIONS ARE THE SAME AS SHOWN ON DETAILS FOR CATCH BASIN. DIMENSIONS FROM PT1 TO PT2 ARE MEASURED ALONG THE CHORD, UNIT PRICE BID FOR CATCH BASIN INCLUDES ALL CURB AND GUTTER FROM PT. 1 TO PT. 2.

DATE	REVISION	BY

DEPARTMENT OF TRANSPORTATION

STATE OF GEORGIA

STANDARD

PRECAST CATCH BASINS

FOR USE WITH CURB (6" OR 8" HT.) & GUTTER (IN SAGS OR LOW POINTS)

SCALE AS SHOWN — REV. & REDR., SEPT. 1982

REV & REDR. R.M.U.
TRA. G.M.E.
CHK. R.K.C.

(SUBMITTED) STATE ROAD & AIRPORT DESIGN ENGR.

(APPROVED) STATE HIGHWAY ENGINEER

NUMBER 1034D PRECAST

41-10