STATE	PROJECT NUMBER	SHEET NO.	TOTAL SHEETS
GA.	STP00-2868-00(001)	148	258

CATCH BASIN

(FOR CATCH BASIN WITH LONGIT. PIPE OVER 24", SEE DETAILS AT RIGHT.)

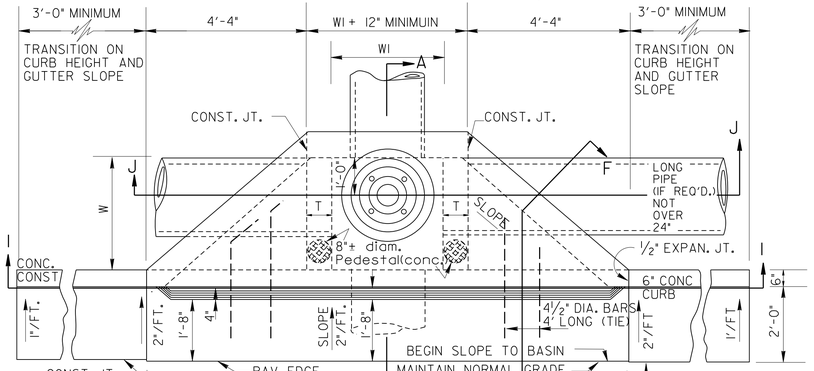

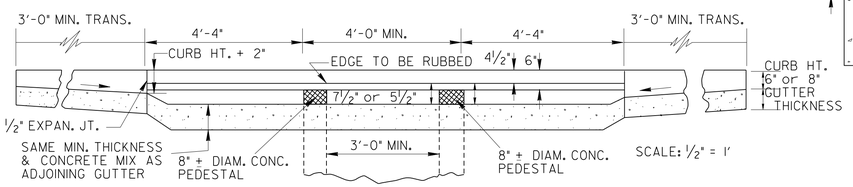

SECTION I-I

NOTE: NORMAL SLOPE OF CONCRETE APRON TO BE INCREASED UP TO 8" TOTAL WHERE "H" PERMITS AND LONGITUDINAL PIPE IS LOWERED FOR OTHER REASONS.

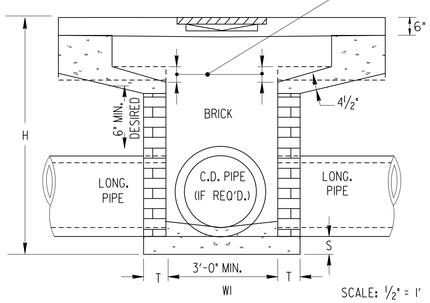

SECTION J-J

NOTE: PIPE SIZES, NUMBER, ALIGNMENT AND INVERTS SHOWN ARE ILLUSTRATIVE. SEE PLANS FOR SPECIFICS. INVERTS TO BE FORMED WITH GROUT OR CONC. AS SHOWN IN THE PLANS OR AS DIRECTED BY THE ENGINEER.

DETAIL OF TOP REINFORCED CONCRETE SLAB

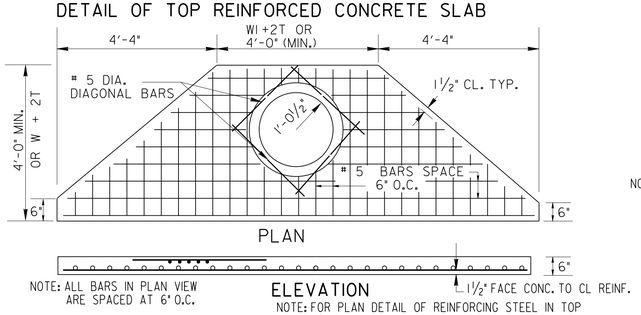

NOTE: ALL BARS IN PLAN VIEW ARE SPACED AT 6" O.C.

NOTE: FOR PLAN DETAIL OF REINFORCING STEEL IN TOP PORTION OF SLAB, SEE PART PLAN AT TOP RIGHT.

NOTE: TOP SLAB MAY BE CAST IN PLACE OR PRECAST. IF CAST IN PLACE, BUILDERS PAPER IS TO BE PLACED BETWEEN THE CATCH BASIN AND TOP SLAB.

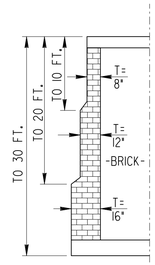

DEPTH LIMITS FOR INCREASING "T"

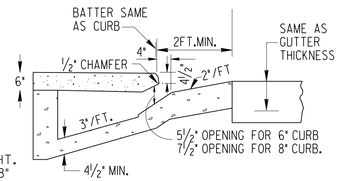

SECTION F-F

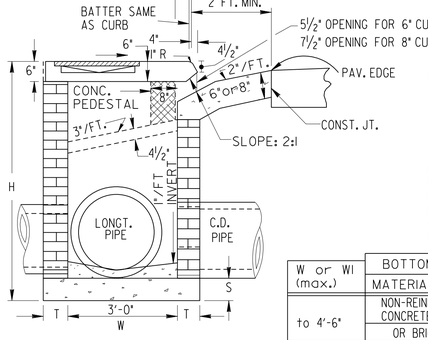

SECTION A-A

NOTE: SEE SEPARATE STDS. FOR PRECAST ALTERNATES. ADAPTERS (STD. 1040) WILL BE REQUIRED WITH CIRCULAR PRECAST UNITS. PRECAST BOX, CIRCULAR, AND/OR BUILT-IN-PLACE CONSTR. MAY BE USED IN COMBINATIONS

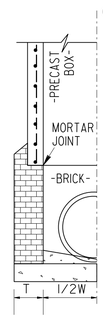

PRECAST BOX ON BRICK (HALF SECTION)

W or WI (max.)	BOTTOM SLAB MATERIALS	"S"
to 4'-6"	NON-REINF. CONCRETE	6"
	OR BRICK	8"
OVER 4'-6"	CONC. REINF. WI 4 BARS 12" O.C. BOTH WAYS 2" CL. FROM SLAB TOP	8"

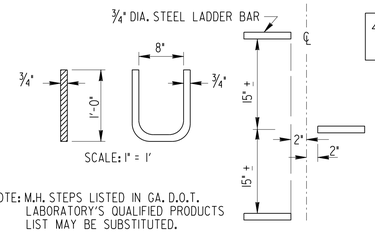

NOTE: M.H. STEPS LISTED IN GA. D.O.T. LABORATORY'S QUALIFIED PRODUCTS LIST MAY BE SUBSTITUTED.

ALL CATCH BASINS WILL HAVE STEPS OR LADDER BARS. NUMBER & LOCATION TO BE AS DIRECTED BY THE ENGINEER.

DETAIL OF LADDER BARS

△E = MINIMUM DIFFERENCE IN ELEVATION FROM PAVEMENT EDGE TO FLOW LINE OF OUTLET PIPE.

TYPICAL MIN. DIMENSIONS			
PIPE DIA.	H (MIN.)	W or WI	△E (MIN)
12	4'-4"	3'-0"	3'-3"
15	4'-7"	3'-0"	3'-6"
18	4'-10"	3'-0"	3'-9"
24	5'-6"	3'-0"	4'-4"
30	6'-2"	3'-7"	5'-0"
36	6'-10"	4'-6"	5'-7"
42	7'-4"	5'-3"	5'-11"
48	8'-0"	6'-0"	6'-6"
54	8'-6"	6'-8"	7'-0"
60	9'-2"	7'-4"	7'-7"

NOTE: THE MIN. H & MIN. E GIVEN IN ABOVE TABLE ARE BASED UPON TYPICAL OUTSIDE DIAMETERS OF CONC. PIPE AND MAY BE VARIED IF CONDITIONS PERMIT WITH VARIED DIMENSIONS SPECIFIED IN THE PLANS OR DIRECTED BY THE ENGINEER. W. & W. DIMENSIONS DO NOT HAVE TO BE EQUAL.

DETAIL OF TOP STAB REINF. STEEL & CLEARANCES REQ'D.

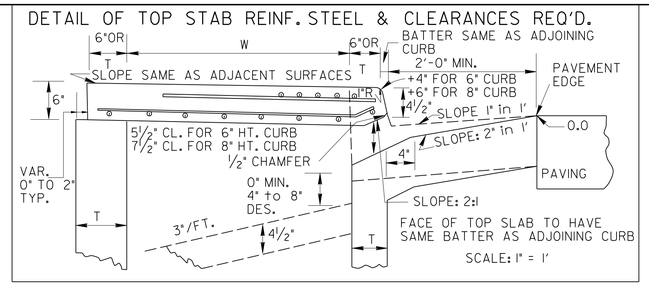

CASTING DETAILS

3" TO 7" DRAFTS TYPICAL

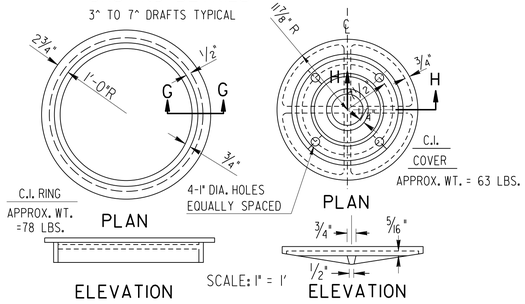

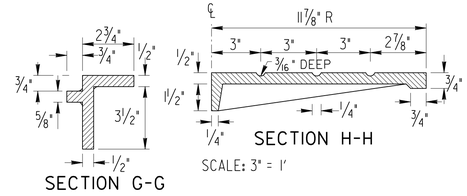

CATCH BASIN ON RADII

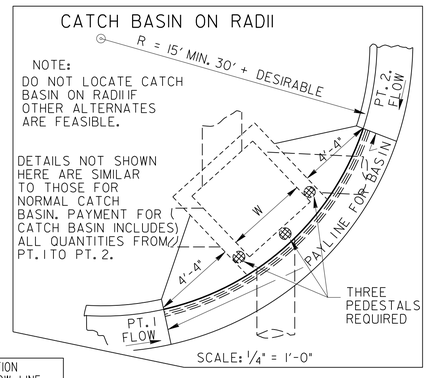

NOTE: DO NOT LOCATE CATCH BASIN ON RADII IF OTHER ALTERNATES ARE FEASIBLE.

DETAILS NOT SHOWN HERE ARE SIMILAR TO THOSE FOR NORMAL CATCH BASIN. PAYMENT FOR (CATCH BASIN INCLUDES) ALL QUANTITIES FROM PT. 1 TO PT. 2.

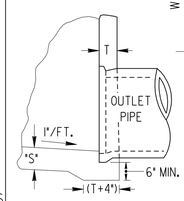

ALTERNATE TO INVERT

CATCH BASIN (WITH PROTUDED BACK)

FOR USE WITH LONGITUDINAL PIPE OVER 24" OR FOR USE WITH RECESSED BOX

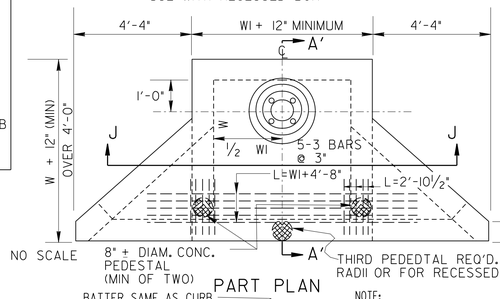

NOTE: DETAILS NOT SHOWN HERE WILL BE SIMILAR TO THOSE AT FAR LEFT FOR NORMAL CATCH BASINS.

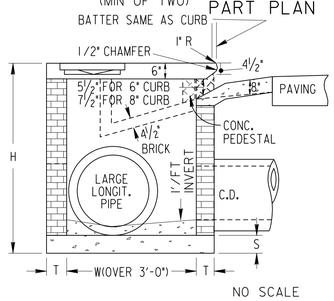

SECTION A'-A'

(FOR LONGITUDINAL PIPE OVER 24")

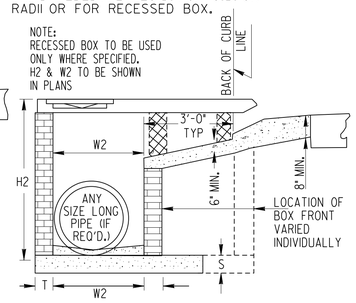

SECTION A'-A'

(WITH RECESSED BOX)

DETAIL OF TOP REINFORCED CONCRETE SLAB

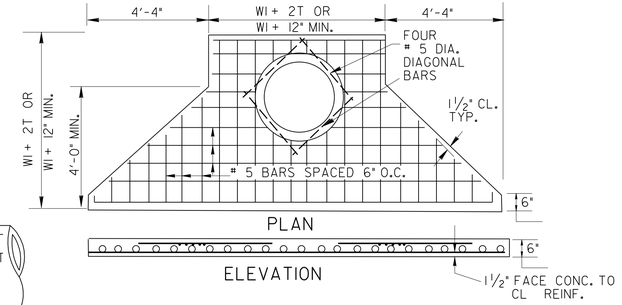

NOTE:

TYPICAL TREATMENT FOR SKEWED PIPES ARE: CIRCULAR PRECAST UNITS; PRECAST SWIVEL SECTIONS; PIPE ELBOWS OR INCREASED BOX SIZES TO ACCOMODATE THE SKEWS.

SEE SEPARATE STANDARDS FOR PRECAST ALTERNATES.

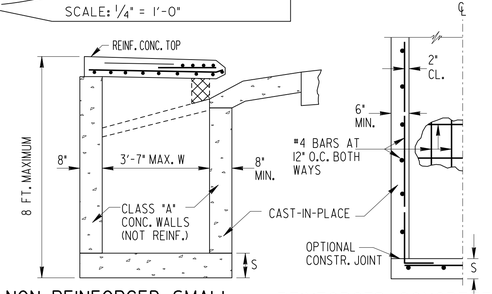

NON-REINFORCED SMALL BASIN (WI NOT OVER 3'-7")

REINFORCED CONCRETE (HALF-SECTION)

CONSTRUCTION ALTERNATES

NOTE: DETAILS NOT SHOWN ABOVE FOR CONSTRUCTION ALTERNATES WILL BE SIMILAR TO BRICK CATCH BASIN DETAILS.

	DATE	DEPARTMENT OF TRANSPORTATION STATE OF GEORGIA	
	REVISION	STANDARD CATCH BASINS FOR USE WITH CURB (6" OR 8" HT.) & GUTTER (IN SAGS OR LOW POINTS)	
		SCALE AS SHOWN	REV. & RED. AUGUST, 1982
	BY	REV. & REDR. R.M.U. TRA. G.M.E. CHK. R.K.C.	(SUBMITTED) STATE ROAD & AIRPORT DESIGN ENGR. (APPROVED) STATE HIGHWAY ENGINEER
			NUMBER 1034D