STATE	PROJECT NUMBER	SHEET NO.	TOTAL SHEETS
GA.	STP00-2868-00(001)	141	258

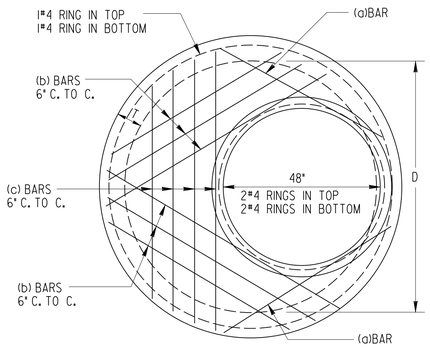

PLAN OF STEEL REINFORCEMENT

REDUCER SLAB - REINF. AND DIMENSIONS							
D	Y MIN.	(a) BARS		(b) BARS		(c) BARS	
		NO.	SIZE	NO.	SIZE	NO.	SIZE
60"	8"	2	#6	4	#6	2	#6
72"	9"	2	#6	6	#6	4	#6

NOTE:
10 FT. MAXIMUM ALLOWANCE COVER ABOVE TOP OF REDUCER SLABS. REDUCER CONES TO BE USED WHERE REDUCER SLABS NOT PERMITTED.

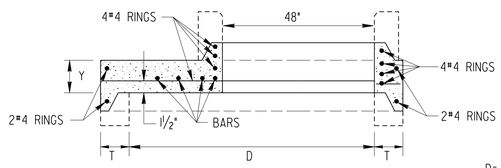

SECTIONAL DETAIL
REDUCER SLAB

D= INSIDE DIAMETER OF BASE UNIT

D	X(MIN)	Z(MIN)
60"	1'-6"	5"
72"	3'-0"	6"

* FOR H=30' MAX. ALLOWABLE COVER ABOVE REDUCER CONE = 25 FEET. FOR 30'<H<60 FT. MAXIMUM ALLOWABLE COVER ABOVE REDUCER CONE = 55 FT.

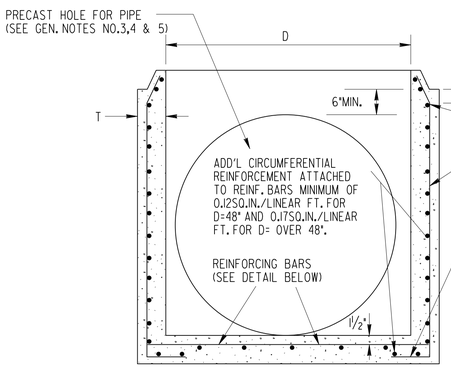

SECTIONAL DETAIL
BASE UNIT

BASE UNIT SHALL CONTAIN IN ADDITION TO A.S.T.M. C-478 REINFORCEMENT, TWO NO.5 VERTICAL BARS AT EACH OPENING EXTENDING FROM WITHIN 2" OF JOINT DOWN WALL INTO BOTTOM SLAB AS SHOWN. (MINIMUM 2" CLEARANCE AROUND)

D	T(MIN.)
48"	5"
60"	5"
72"	6"

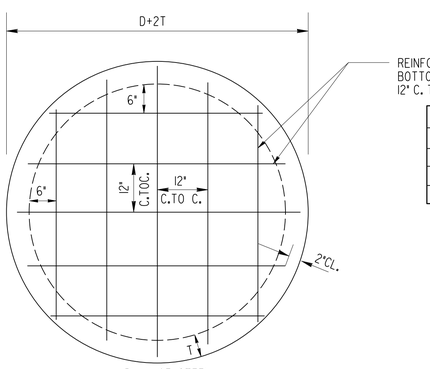

PLAN OF STEEL REINFORCEMENT BOTTOM SLAB

BASE UNIT

REINFORCING BARS IN TOP OF BOTTOM SLAB MAXIMUM SPACING 12" C. TO C. BOTH WAYS

BAR SIZE		
D	H ≤ 30'	30' < H ≤ 60'
48"	#5	#6
60"	#6	#7
72"	#6	#8

STEPS ARE REQUIRED IN ALL MANHOLES OVER 4 FT. IN HEIGHT.

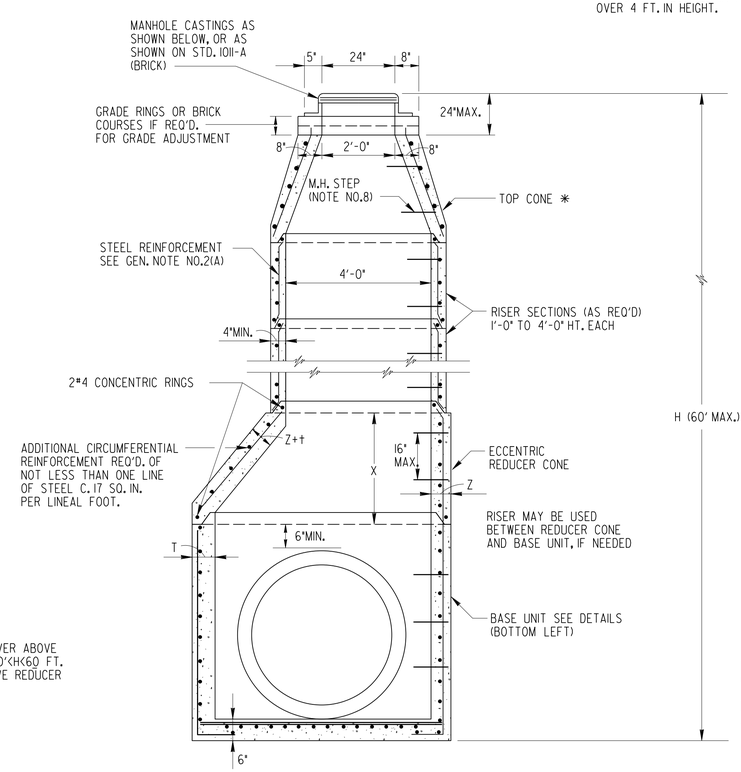

SECTIONAL DETAIL
(MANHOLE WITH BASE UNIT OF D=OVER 48")

* CONCENTRIC CONC. SHOWN MIN. HT.=2'-0" ECCENTRIC CONES MAY BE USED AS AN ALTERNATE MIN. HT.=3'-0" DESIGNED ACCORDING TO A.S.T.M. C-478

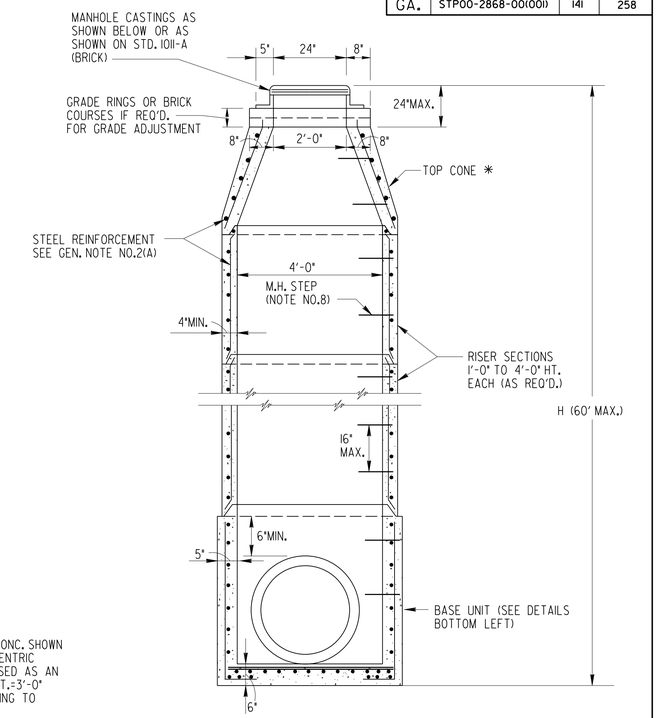

SECTIONAL DETAIL
(MANHOLE WITH BASE UNIT OF D= 48")

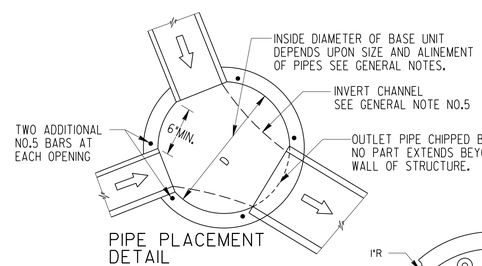

PIPE PLACEMENT DETAIL

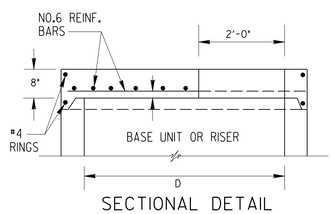

SECTIONAL DETAIL

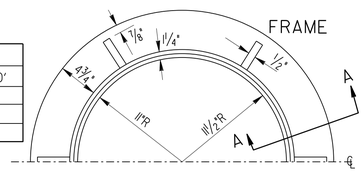

APPROX. WEIGHTS: FRAME - 200 LBS.
COVER - 135 LBS.

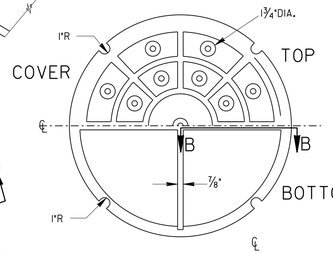

NOTE:
FRAME AND COVER TO BR FITTED BEFORE LEAVING SHOP.

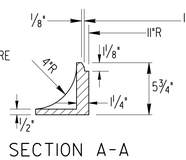

SECTION A-A

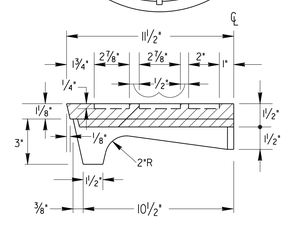

SECTION B-B

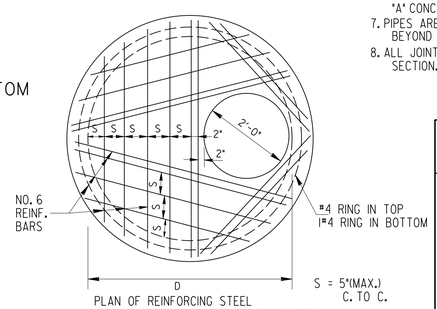

PLAN OF REINFORCING STEEL
FLAT TOP SLAB IS FOR USE IN AREA OF MINIMUM COVER ONLY. MAXIMUM HEIGHT OF MANHOLE WITH FLAT TOP SLAB SHALL BE 4FT. ABOVE TOP OF HIGHEST ENTERING PIPE.

FLAT TOP SLAB

MANHOLE CASTINGS (C.I.)

GENERAL NOTES:

1. MATERIALS: ALL CONCRETE, STEEL BARS AND STEEL WIRE REINFORCEMENT SHALL COMPLY WITH SECTION 866.02 OF GEORGIA STANDARD SPECIFICATIONS AND SPECIAL PROVISION WHICH MODIFY SECTION 866.02.
2. REINFORCEMENT:
   (A) PLACEMENT AND DESIGN OF STEEL REINFORCEMENT IN RISER UNITS, CONE SECTIONS, GRADE RINGS AND JOINTS SHALL BE IN COMPLIANCE WITH A.S.T.M. C 478 UNLESS OTHERWISE NOTED.
   (B) BASE UNITS, REDUCER SLABS AND FLAT TOP SLABS SHALL HAVE STEEL REINFORCEMENT AS SHOWN IN DETAILS AT LEFT.
3. OPENINGS FOR PIPES LARGER THAN 6" IN DIAMETER ARE TO BE PRECAST. A MINIMUM OF 6" ALONG THE INTERCIRCUMFERENCE IS TO REMAIN BETWEEN THE EXTREMITIES OF HOLE FOR ADJUSTMENT PIPE IN ANY SINGLE UNIT. A MINIMUM OF TWO REINF. BARS SHALL REMAIN IN WALL BETWEEN ANY TWO OPENINGS.
4. THE CONTRACTOR WILL FURNISH THE FABRICATOR WITH THE ANGLE OF ALIGNMENT AND SIZE OF ALL PIPES TO ENTER MANHOLE AND THE HEIGHT OF STRUCTURE.
5. BASE UNITS SHALL HAVE SUFFICIENT HEIGHT TO ALLOW FOR MINIMUM OF 6" OF WALL BETWEEN TOP OF HIGHEST OPENING FOR PIPES AND BOTTOM OF JOINT.
6. INVERT CHANNELS:
   (A) FOR SANITARY SEWER MANHOLES SEE GEORGIA STANDARD SPECIFICATIONS FOR CHANNEL REQUIREMENTS.
   (B) FOR STORM SEWER MANHOLES, CHANNELS BUILT TO SUIT PIPE SIZE AND LOCATION. HEIGHT OF CHANNEL EQUAL TO ½ DIAMETER OF OUTLET PIPE, CHANNEL BUILT FROM GROUT OR CLASS "A" CONCRETE.
7. PIPES ARE TO BE EXTENDED INTO STRUCTURE WALL A MINIMUM OF 4" BUT SHOULD NOT EXTEND BEYOND INTERIOR WALL OF STRUCTURE.
8. ALL JOINTS, EXCEPT FOR GRADE RINGS AND TOP OF TOP CONE, SHALL HAVE TONGUE AND GROOVE SECTION.

	6-1-75	DATE	DEPARTMENT OF TRANSPORTATION STATE OF GEORGIA
	CASTINGS & BASE U.	REVISION	STANDARD PRECAST REINFORCED CONCRETE MANHOLES
			NO SCALE — AUGUST, 1973
	R.M.U.	BY	DESIGNED G.C.L. (SUBMITTED) R.M.U. — STATE ROAD DESIGN ENGINEER DRAWN R.M.U. (APPROVED) CHECHED J.R.C. — STATE HIGHWAY ENGINEER
			NUMBER 1011A PRECAST

41-02