STATE	PROJECT NUMBER	SHEET NO.	TOTAL SHEETS
GA.	STP00-2868-00(001)	140	258

BRICK MANHOLE SECTION
(PIPE OUTSIDE DIAMETER IS 48" OR MORE)

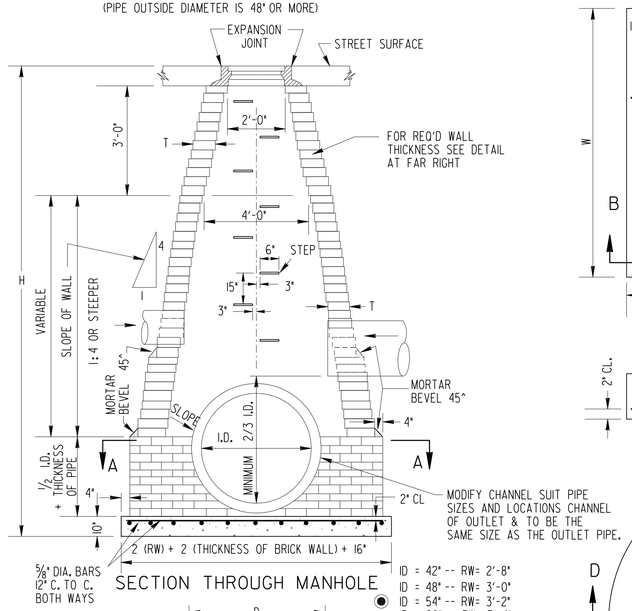

ID = 42" -- RW= 2'-8"
ID = 48" -- RW= 3'-0"
ID = 54" -- RW= 3'-2"
ID = 60" -- RW= 3'-4"
ID = 66" -- RW= 3'-7"
ID = 72" -- RW= 3'-9"
ID = 78" -- RW= 3'-11"
ID = 84" -- RW= 4'-2"
RW = INSIDE RADIUS OF WALL

SECTION THROUGH MANHOLE

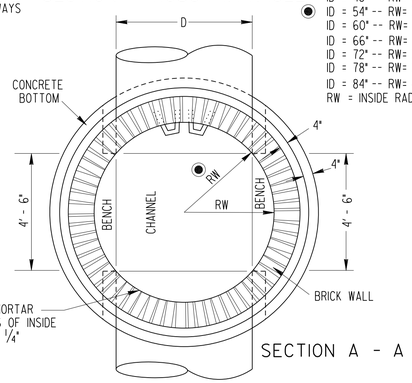

SECTION A - A

REINFORCED CONCRETE COVER

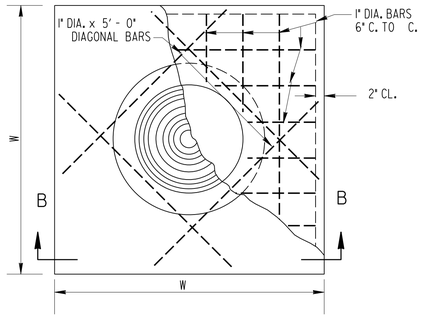

PLAN

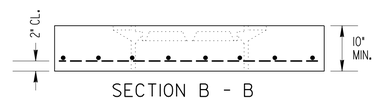

SECTION B - B
FRAME TO BE USED WITH CONCRETE COVER

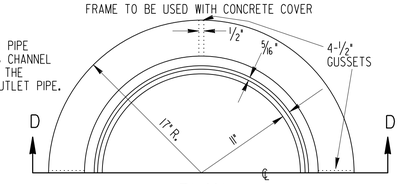

PLAN

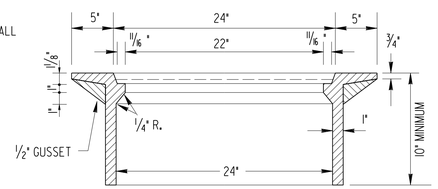

SECTION D - D
SCALE : 1 1/2" = 1'

PLACEMENT FOR CONCRETE COVER

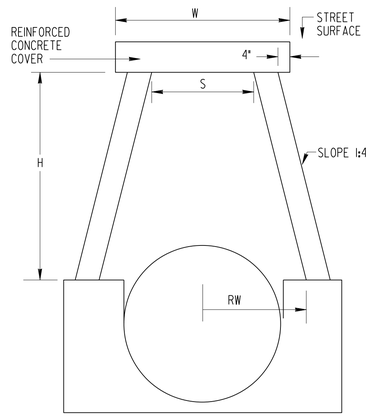

FORMULA FOR COMPUTING W
RW = INSIDE RADIUS OF WALL
S = 2 RW - h/2
W = S + 24"

NOTE:
USE CONCRETE COVER WITH MANHOLE CASTINGS IF FILL FROM TOP OF PIPE TO FINISHED SURFACE IS LESS THAN:

4'-6" FOR 42" PIPE
5'-0" FOR 48" PIPE
5'-6" FOR 54" PIPE
6'-0" FOR 60" PIPE
6'-6" FOR 66" PIPE
7'-0" FOR 72" PIPE
7'-6" FOR 78" PIPE
8'-0" FOR 84" PIPE

THICKNESS OF BRICK WALL
SEE DETAIL AT FAR RIGHT

DEPTH	THICKNESS (T)
TO 10'	*8" MIN.
10' TO 20'	12" MIN.
20' TO 30'	16" MIN.

*FOR COMBINATION BRICK & PRECAST M.H. (SEE BELOW) ONLY 12" OR 16" BRICK WALL THICKNESS IS TO BE USED FOR BASE.

BRICK MANHOLE SECTION
(PIPE OUTSIDE DIAMETER IS LESS THAN 48")

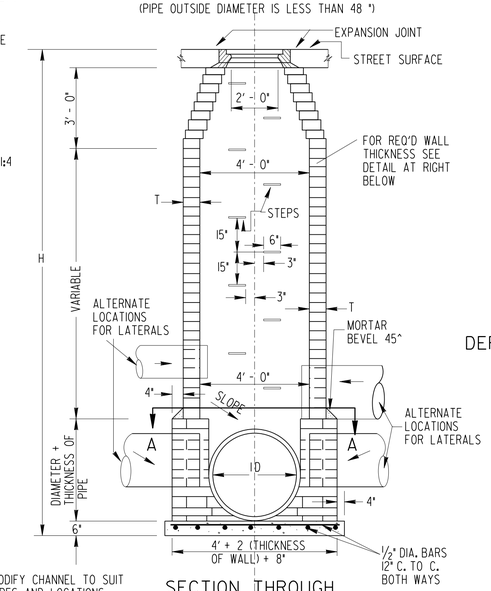

MODIFY CHANNEL TO SUIT PIPES AND LOCATIONS. CHANNEL AT OUTLET END TO BE THE SAME SIZE AS OUTLET PIPE.

SECTION THROUGH MANHOLE

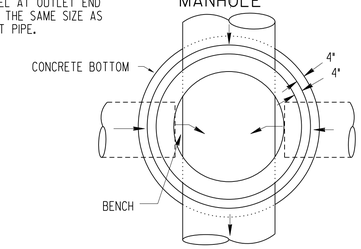

SECTION A - A

CAST IRON STEP

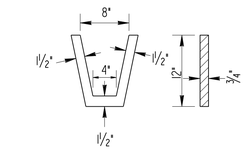

NOTE :
STEPS ARE REQUIRED IN ALL MANHOLES WHERE "H" IS GREATER THAN 4' - 0". NUMBER AND LOCATION OF STEPS TO BE AS DIRECTED BY THE ENGINEER. PLASTIC OR RUBBER COATED STEPS LISTED IN THE GA. D.O.T. QUALIFIED PRODUCTS MANUAL MAY BE SUBSTITUTED.

DEPTH LIMITS FOR INCREASING WALL THICKNESS

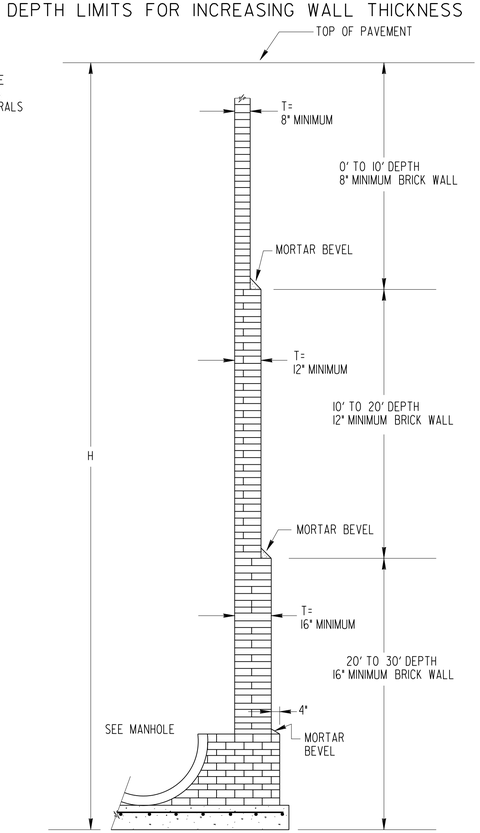

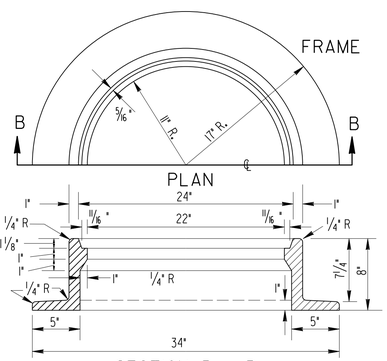

SECTION B - B
SCALE: 3"=1'-0"

APPROXIMATE WEIGHTS

C.I. FRAME	282 LBS.
C.I. COVER	178 LBS.

NOTE: COVER AND FRAME MUST BE FITTED BEFORE LEAVING SHOP, PAINT ACTUAL WEIGHT OF EACH CASTING ON ITS FACE.

MANHOLE FRAME & COVER SHOWN ON STD. 1011A PRECAST MAY BE USED AN ALTERNATE TO CASTINGS SHOWN HERE.

MANHOLE CASTINGS COVER

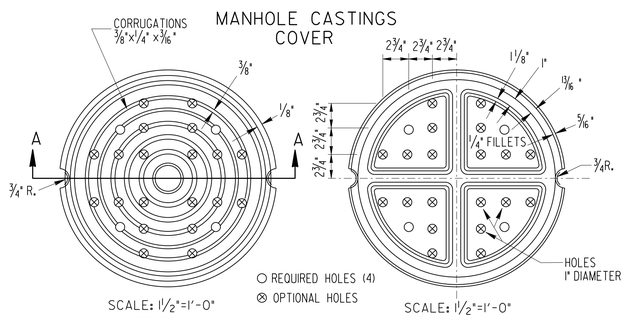

SCALE: 1 1/2"=1'-0" TOP
SCALE: 1 1/2"=1'-0" BOTTOM

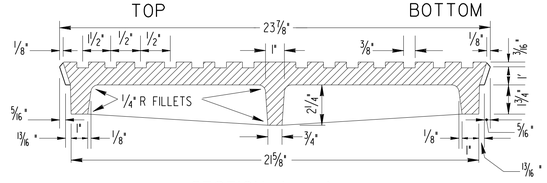

SECTION A - A
SCALE: 3"=1'-0"

ALTERNATE - COMBINATION BRICK & PRECAST MAN HOLES

NOTES FOR COMBINATION MANHOLE:
- BRICK PORTION OF MANHOLE WILL BE CONSTRUCTED WITH SEAT TO GIVE BEST POSSIBLE FIT FOR PRECAST UNIT. MINIMUM THICKNESS FOR BRICK WALL WILL BE 12" FOR H TO 20 FT. AND 16" FOR H=20FT. TO 30 FT.
- PRECAST UNIT WITHOUT TONGUE OR GROOVE AT BOTTOM SHALL BE PLACED IN BRICK SEAT WITH MORTAR IN JOINT ALL ROUND. BRICK BASE SHALL SET FOR 24 HOURS MIN. BEFORE PRECAST SECTIONS ARE INSTALLED.
- STEPS IN THE BRICK PORTION OF MANHOLE WILL BE IN ALIGNMENT WITH AND MATCH THE STEPS IN THE PRECAST SECTIONS RATHER THAN AS SHOWN FOR THE ALL BRICK MANHOLES.

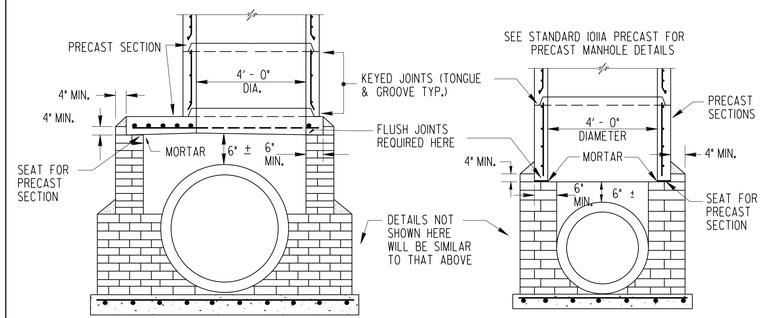

	DATE	DEPARTMENT OF TRANSPORTATION STATE OF GEORGIA	
	REVISION	STANDARD BRICK MANHOLES	
		SCALE AS SHOWN	REV. & REDR. OCTOBER, 1981
	BY	DES. 8-58 (SUBMITTED) DRW. R.M.U. TRA. G.M.E. (APPROVED) CHK. R.K.C.	STATE ROAD & AIRPORT DESIGN ENGR. STATE HIGHWAY ENGINEER

NUMBER 1011A

41-01