STATE	COUNTY	PROJECT NUMBER	SHEET NO.	TOTAL SHEETS
GA.	FULTON	STP00-2868-00(001)	132	258

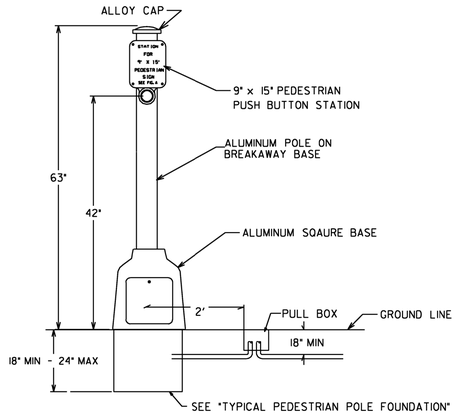

PEDESTRIAN PUSH BUTTON POST

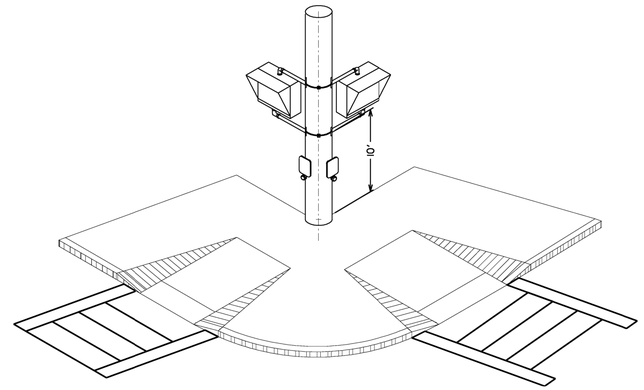

PEDESTRIAN SIGNAL HEAD ORIENTATION FOR SIDE OF POLE MOUNTING

INSTALL PEDESTRIAN SIGNAL HEADS SO THAT VEHICLES MAKING TURNS WILL NOT DAMAGE THE EQUIPMENT

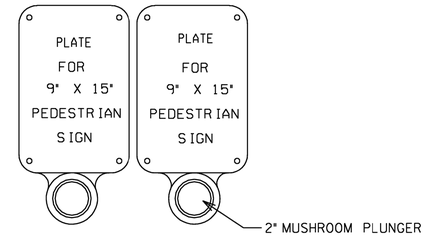

A "PUSH BUTTON STATION" IS THAT PIECE OF EQUIPMENT THAT CONTAINS THE PEDESTRIAN INSTRUCTIONAL SIGN PLATE AND THE PUSH BUTTON

PEDESTRIAN PUSH BUTTON STATION

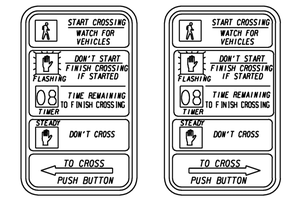

R10-3E(L) 9" X 15"

R10-3E(R) 9" X 15"

PEDESTRIAN SIGNS

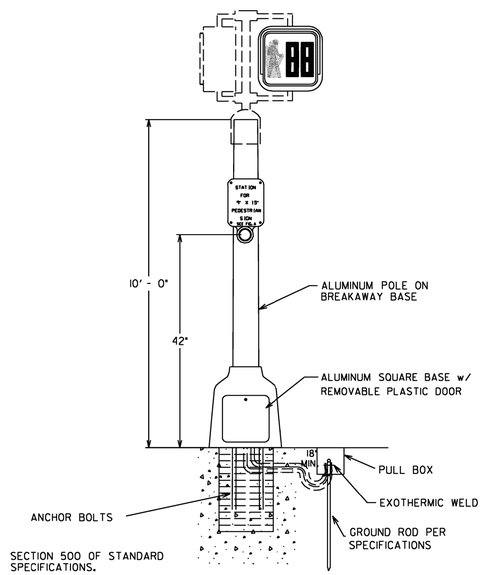

DETAIL FOR PEDESTRIAN SIGNAL POLES

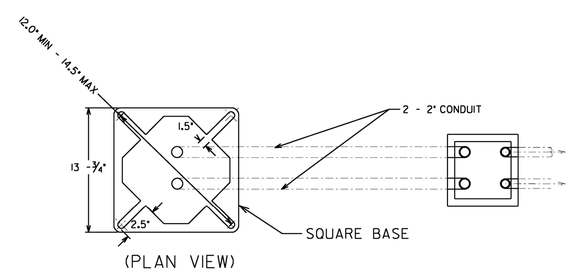

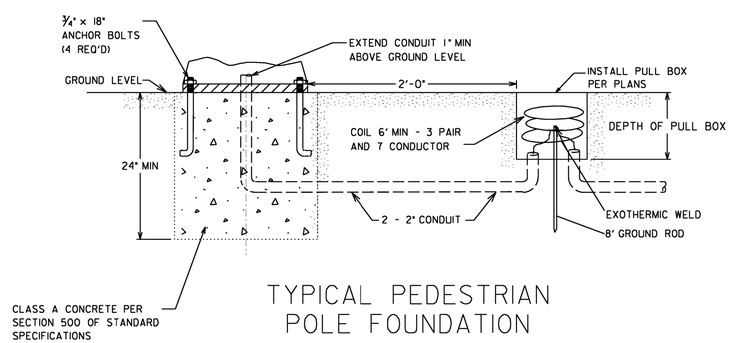

TYPICAL PEDESTRIAN POLE FOUNDATION

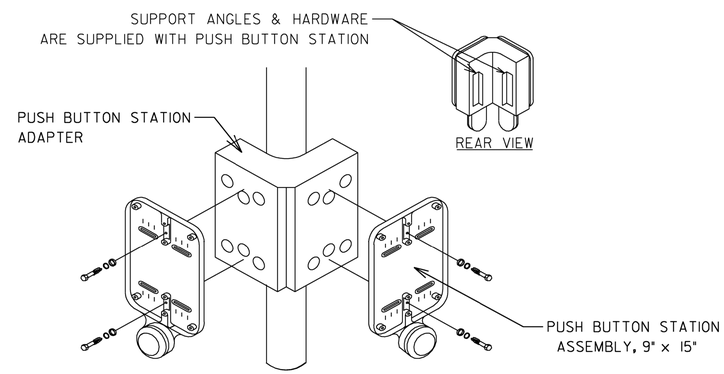

DOUBLE PUSH BUTTON STATION ADAPTER FOR 4" DIA. PEDESTRIAN POLE

NOTE:
DETAILS SHOWN IS FOR TOP POST MOUNTING ASSEMBLY ON 10 FEET PEDESTRIAN POLE.
A CLAMSHELL MOUNTING ASSEMBLY (NOT SHOWN) MAY BE USED AS APPROVED BY THE DEPARTMENT.
THE CLAMSHELL MOUNTING HARDWARE ASSEMBLY SHALL MEET THE SAME GDOT STANDARDS AS THE PEDESTRIAN SIGNAL HOUSING IN PAINT AND MATERIAL.

Guidelines For Usage On Metric Projects

When these details are incorporated into plans and or projects that are being prepared or constructed in metric units, exact or precise conversion to metric units is not required. The dimensions shown that are in feet and inches may be converted to corresponding metric units using the following "Rounded-Off" conversion factors: 1" =25mm, 4"=100mm, and 12" or 1' =300mm. All measurement notes that refer to linear feet and square yards shall be interpreted to mean linear meters and square meters.

REV. BY:	REVISION DESCRIPTION	DATE

DEPARTMENT OF TRANSPORTATION
STATE OF GEORGIA

TRAFFIC SIGNAL DETAIL

PEDESTRIAN FACILITIES INSTALLATION DETAILS

APRIL 2010

NOT TO SCALE - REPORT ERRORS

DETAIL NUMBER
TS-03A