TYPICAL SECTION NO. 05
SR 141/MEDLOCK BRIDGE

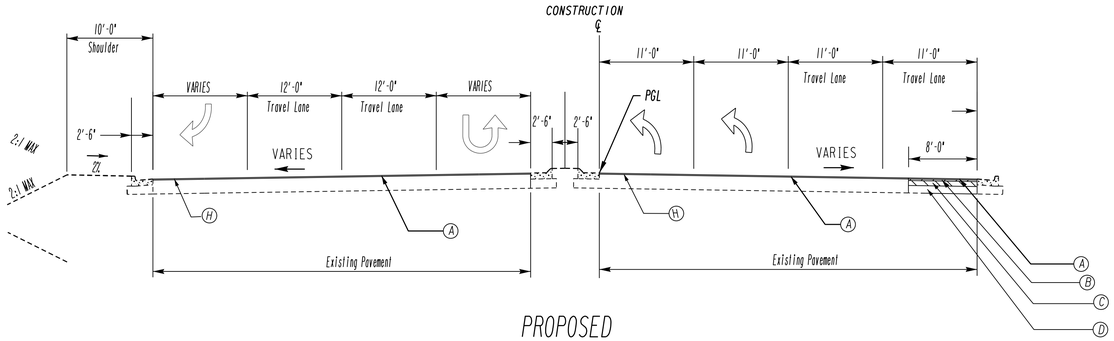

PROPOSED
STATION 114+74 TO 117+00

(A) 165 LB/SY RECYCLED ASPHALTIC CONCRETE, 12.5 MM SUPERPAVE, GP 2 ONLY, INCL POLYMER-MODIFIED BITUM MATL & H LIME
(B) 220 LB/SY RECYCLED ASPHALTIC CONCRETE, 19 MM SUPERPAVE, GP 1 OR 2, INCL BITUM MATL & H LIME
(C) 770 LB/SY RECYCLED ASPHALTIC CONCRETE 25 MM SUPERPAVE, GP 1 OR 2, INCL BITUM MATL & H LIME
(D) GRADED AGGREGATE BASE INCL MATL, 12 IN.
(F) 6" X 30" CONCRETE CURB AND GUTTER, TYPE 2
(G) 6" X 30" CONCRETE CURB AND GUTTER, TYPE 7
(H) VARIABLE DEPTH MILLING
(I) 165 LB/SY RECYCLED ASPHALTIC CONCRETE, 12.5 MM SUPERPAVE, GP 1 OR 2, INCL BITUM MATL & H LIME
(J) 330 LB/SY RECYCLED ASPHALTIC CONCRETE, 19 MM SUPERPAVE, GP 1 OR 2, INCL BITUM MATL & H LIME
(K) GRADED AGGREGATE BASE INCL MATL, 10 IN.

TYPICAL SECTION NO. 06
BUICE ROAD

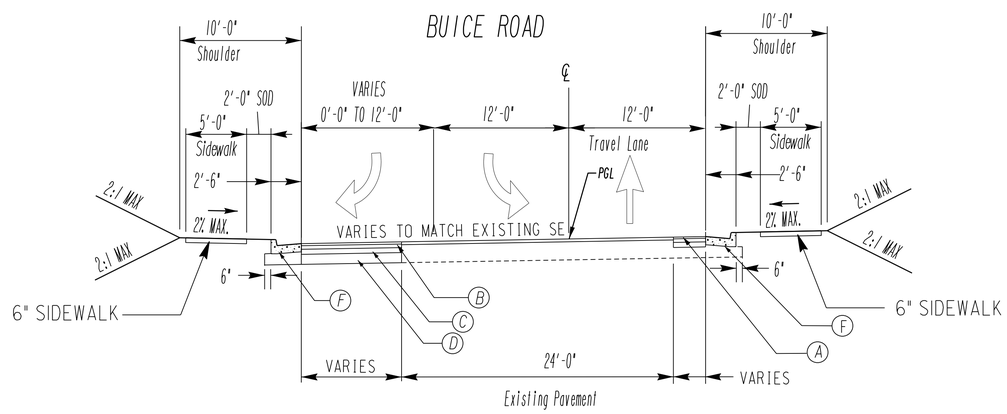

STATION 3+35 TO 6+75

TYPICAL SECTION NO. 07
TEMPORARY ASPHALT TO COMPLETE STAGE 2 ON OLD ALABAMA ROAD

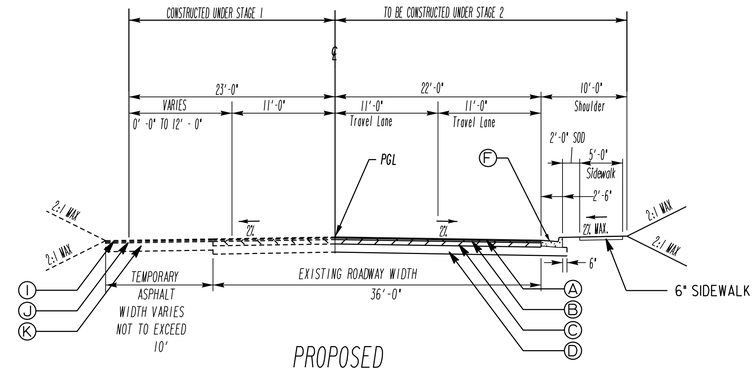

PROPOSED
STATION 10+40 TO 12+35
TEMPORARY ASPHALT WILL BEGIN AT 10+00 AND END AT 12+35

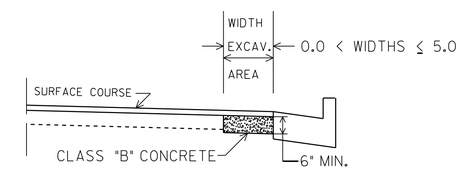

NO SCALE
CLASS "B" CONCRETE BASE OR PAVEMENT WIDENING
Item Code 500-9999 - Cu. Yds.

In excavated areas between the existing paving and new curb and gutter that are 5'-0" or less in width, Class "B" concrete shall be placed in lieu of the base and paving specified by the typical section. Payment will be made under "Class B Concrete Base and Pavement Widening".

In excavated areas greater than 5'-0" in width, the Contractor shall place base and paving as specified on the typical section.

See plans for details of curb and gutter construction.

CLASS "B" CONCRETE BASE OR WIDENING DETAIL

GEORGIA
DEPARTMENT OF TRANSPORTATION

NOT TO SCALE

REVISION DATES		

STATE OF GEORGIA
DEPARTMENT OF TRANSPORTATION
OFFICE: DISTRICT 7 PRECONSTRUCTION
TYPICAL SECTIONS
OLD ALABAMA RD @
SR 141/MEDLOCK BRIDGE RD

DRAWING NO.
5-02