STATE	PROJECT NUMBER	SHEET NO.	TOTAL SHEETS
GA.	BRWLB-9004-00(008)	579	701

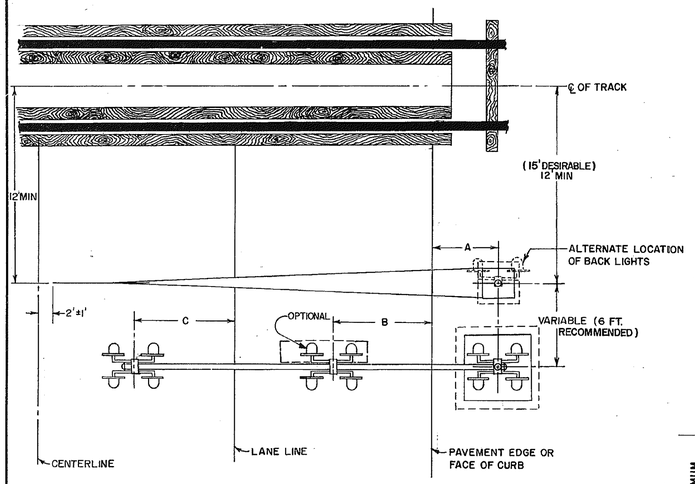

MULTI-LANE

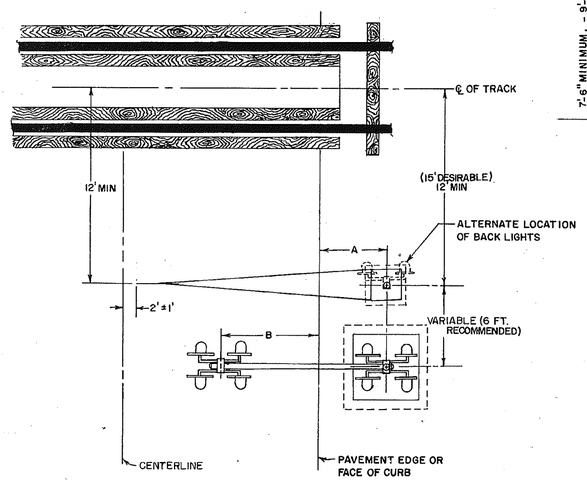

TWO LANE

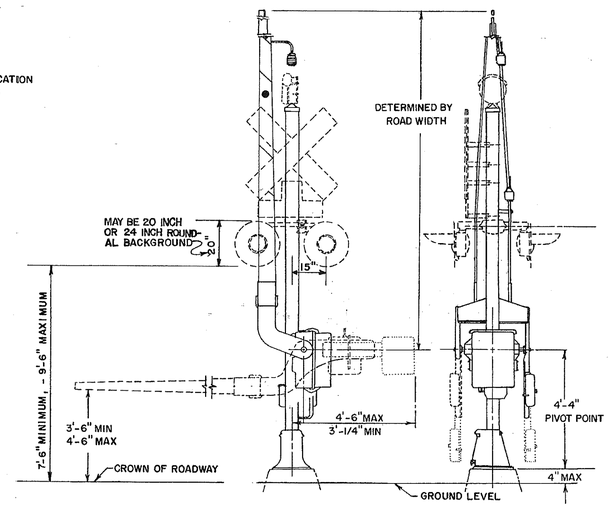

GATE ELEVATIONS

NOTE: GATE IN DOWN POSITION SHALL BE 90° TO ROADWAY.

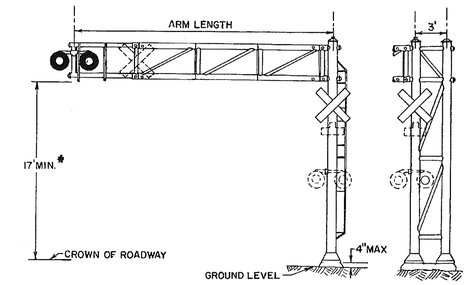

NON-ROTATABLE CANTILEVER

NO SCALE

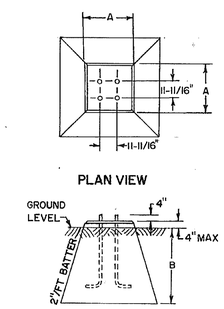

CANTILEVER LENGTH (FT)	DIMENSION A (IN)	B (IN)
8 TO 14	36	108
15 TO 24	42	108
25 TO 31	48	120

SINGLE MAST

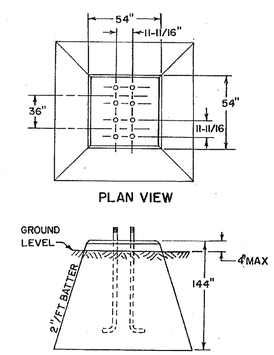

DOUBLE MAST

NON-ROTATABLE CANTILEVER FOUNDATIONS

NO SCALE

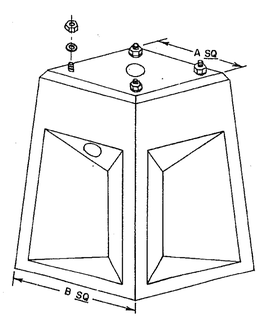

Bolt Spacing (IN)	Assembly Number	A (IN)	B (IN)	Height (IN)	Approx Weight (LB)
11-11/16 x 11-11/16	131718-X	19	30	48	1450
	131721-1X	22	28	54	1640
	131725-X	30-1/2	30-1/2	60	2000
	131725-1X	30-1/2	30-1/2	60	2000

ONE PIECE GATE FOUNDATIONS

NO SCALE

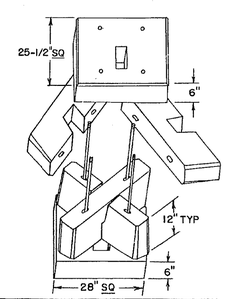

Bolt Spacing (IN)	Assembly Number	Assembled Height (IN)	Approx. Weight (LB)
11-11/16 x 11-11/16	131731-4X	46	1900
	131731-5X	60	2300
	131731-6X	72	2650
	131731-7X	84	3000
	131731-8X	96	3350

SECTIONAL GATE FOUNDATIONS

NO SCALE

DIMENSION	WITH CURB OR CURB & GUTTER	WITHOUT CURB OR CURB & GUTTER	ROADWAY WITH PAVED SHOULDER	MULTI-LANE
A	4'-1" MIN. (W) 20" ROUNDAL BACKGRD 4'-3" MIN. (W) 24" ROUNDAL BACKGRD	8'-1" MIN. (W) 20" ROUNDAL BACKGRD 8'-3" MIN. (W) 24" ROUNDAL BACKGRD	2' FROM EDGE OF PAVEMENT OR 8'-3" FROM TRAVEL LANE, WHICHEVER IS GREATER	—
B	3/4 LANE WIDTH, MAX 2 FT, MIN	3/4 LANE WIDTH, MAX 2 FT, MIN		—
C	—	—		3/4 LANE WIDTH, MAX. 2 FEET, MIN.

SIGNAL EQUIPMENT LOCATION TOLERANCES

NO SCALE

GENERAL NOTES:

ALL EQUIPMENT AND FOUNDATION SIZE DIMENSIONS ARE SHOWN FOR EXEMPLARY PURPOSES AND ARE NOT INTENDED TO SPECIFY ACTUAL SIZES. THE RAILROAD IS RESPONSIBLE FOR THE PROPER SIZE CANTILEVER AND GATE WITH THEIR RESPECTIVE FOUNDATIONS FOR EXISTING CONDITIONS.

THE PREFERRED EQUIPMENT LOCATION DIMENSIONS AS SHOWN ON THE PLAN MAY BE MODIFIED TO SUIT FIELD CONDITIONS WITHIN THE TOLERANCES SHOWN.

* TO ESTABLISH OVERHEAD CLEARANCE FOR CANTILEVERED FLASHING LIGHTS ADD 9 FT TO MIN. DIMENSION (HEIGHT OF MAN WITH ARM EXTENDED)

		DATE	11-22-94
		REVISIONS	DIMENSION TOLERANCES
		BY	R.M.U.

DEPARTMENT OF TRANSPORTATION
STATE OF GEORGIA

STANDARD

RAILROAD GRADE CROSSING GATES AND CANTILEVERS

NO SCALE

SEPT., 1982

DES. HWC
DRW.
TRA.
CHK.

(SUBMITTED) STATE TRAFFIC & SAFETY ENGINEER
(APPROVED) STATE HIGHWAY ENGINEER

NUMBER 9022A