STATE	PROJECT NUMBER	SHEET NO.	TOTAL SHEETS
GA.	BRMLB-9004-001(008)	549	701

NOTE:
SEE STANDARD 1019-A- BRICK DROP INLETS- FOR DETAIL OF GRATING FRAME,HOOD,ETC., WHERE NEEDED.

NOTE: OPENING FOR PIPE SHALL BE THE OUTSIDE DIAMETER OF THE REQ'D PIPE PLUS 1" MIN.,OPENING SHALL HAVE CORRUGATIONS.

TYPE "A"

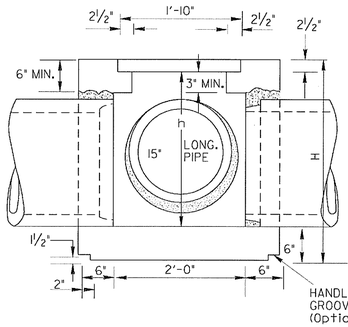

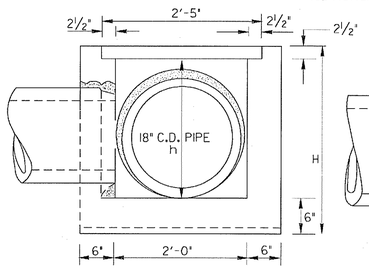

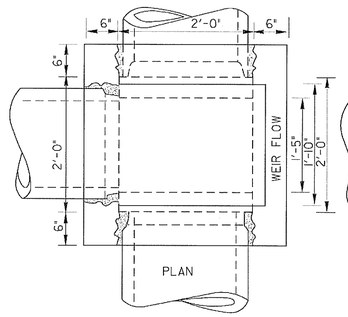

SCALE: 1" =1'

TYPE"B" WITH WEIR

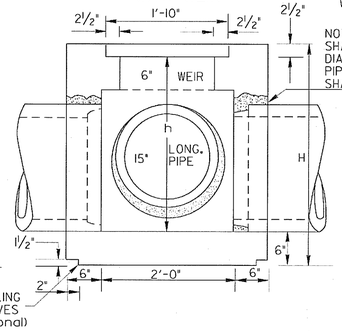

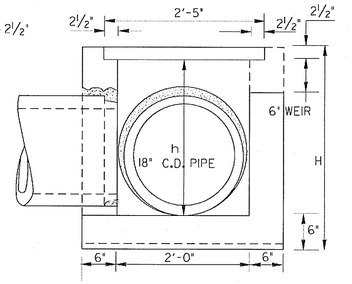

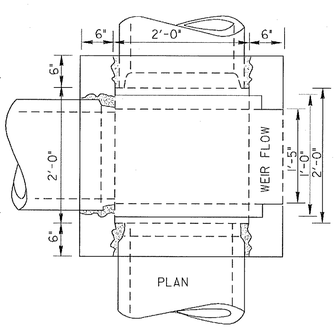

SCALE: 1" =1'

TYPE "C" (WITH OR WITHOUT WEIR)

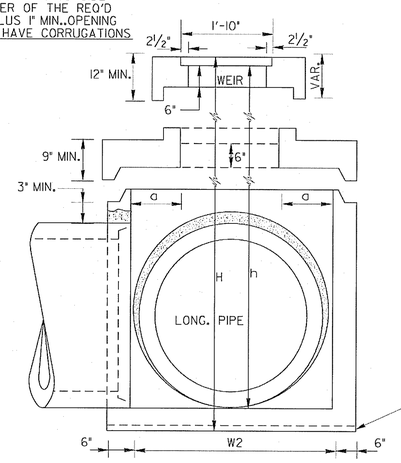

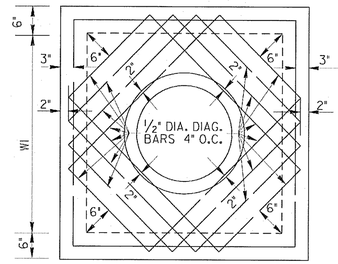

SCALE: ¾" =1

FOR OTHER DETAILS, SEE TYPE "B"

TYPE "E"

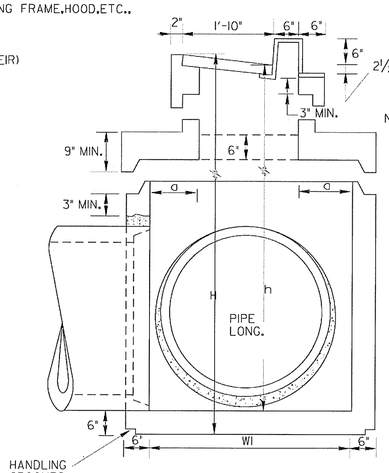

HANDLING GROOVES (Optional)

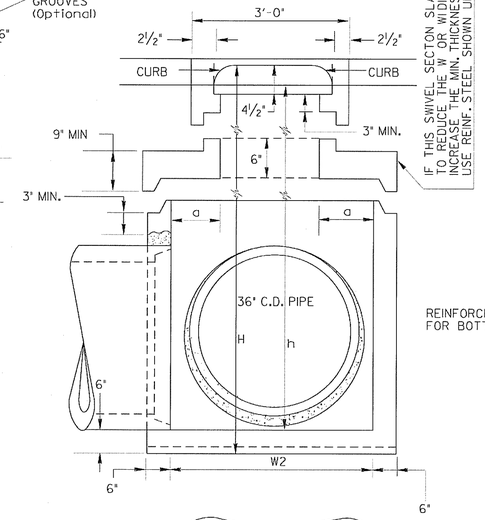

IF THIS SWIVEL SECTON SLAB IS USED TO REDUCE THE W OR W1 DIMENSIONS, INCREASE THE MIN. THICKNESS TO 9" AND USE REINF. STEEL SHOWN UNDER TYPE "C".

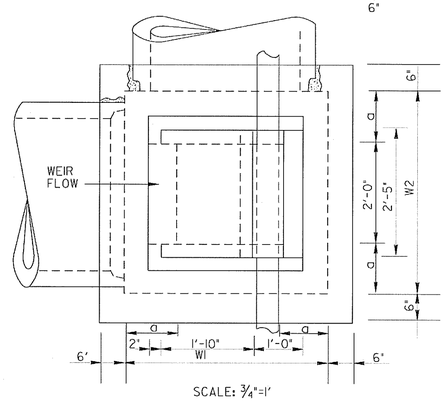

SCALE: ¾"=1'

NOTE:
SEE STANDARD 1019A (BRICK) AND STANDARD 1040 FOR CONSTRUCTION ALTERNATES BRICK MASONRY AND CIRCULAR PRECAST SECTIONS RESPECTIVELY.

ISOMETRIC VIEW OF DROP INLET TYPE "C" OR "E" FOR PIPES LARGER THAN 18"(WITH OR WITHOUT WEIR)

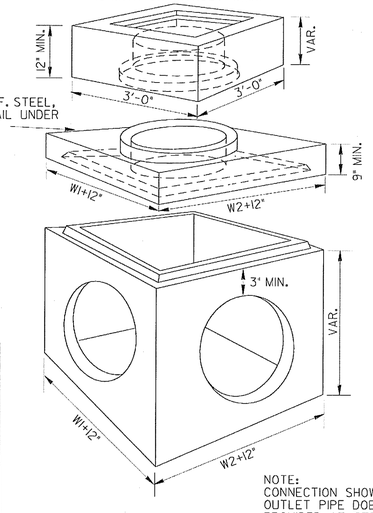

NOTE:
FOR REINF. STEEL, SEE DETAIL UNDER TYPE "C"

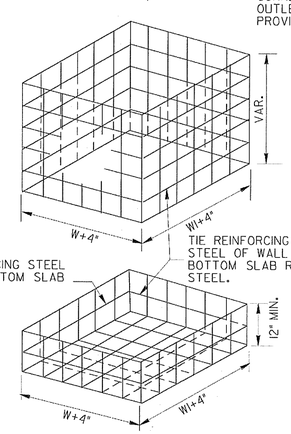

METHOD OF CONNECTING PIPE

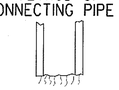

STEP 1

CUT CONCRETE PIPE LEAVING APPROXIMATELY 3" OF REINFORCING MESH EXPOSED.

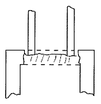

STEP 2

POSITION PIPE APPROXIMATELY 3" INTO OPENING OF WALL.

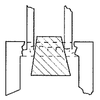

STEP 3

POSITION CONICAL CORE INSIDE OF PIPE AND SEAL WITH GROUT (1/2" MIN. THICKNESS OF GROUT). REMOVE CORE WHEN SET AND RUB GROUT TO SEAL JOINTS.

NOTE:
CONNECTION SHOWN ABOVE FOR USE WHERE CONCRETE OUTLET PIPE DOES NOT HAVE BELL OR HUB END PROVIDED AT STRUCTURE OUTLET.

ALTERNATE METHOD OF CONNECTION SKEWED PIPE

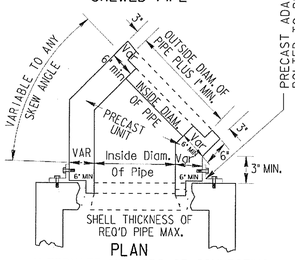

PRECAST ADAPTOR MAY BE BOLTED TO DROP INLET WITH 2" 1/4" x 3" ANGLE IRON.

PLAN

ALTERNATE METHODS OF CONNECTING SKEWED PIPES MAY INCLUDE PIPE ELBOWS OR CIRCULAR PRECAST BASE UNITS. SEE SEPARATE STANDARDS.

NOTE: REINFORCING STEEL SHALL BE No. 4 STEEL BARS AT 12" O.C. BOTH WAYS OR EQUIVALENT WIRE FABRIC REINFORCING.

SPECIAL NOTE:
STANDARD 1019A INLETS ARE FOR USE AT LOW POINTS AND WHERE HYDRAULIC LOW CAPACITY GRATES ARE SUFFICIENT. WHERE HIGHER CAPACITY GRATES ARE NEEDED ON A CONTINUOUS GRADE, STANDARD 1019B IS RECOMMENDED.

DIMENTIONS FOR DROP INLETS

PIPE SIZE	TYPE "A"		TYPE "B"		TYPE "C"				TYPE "E"			
	MIN. h	MIN. H	MIN. h	MIN. H	W1or W2	a	MIN. h	MIN. H	W1or W2	a	MIN. h	MIN. H
15"	2'- 0"	2'-8½"	2'- 7"	3'-3½"	2'- 0"		2'-7"	3'-3½"	2'- 0"		2'-7"	3 - 3½"
18"	2'-3½"	3'- 0"	2'-10"	3'-6½"	2'- 0"		2'-10"	3'-6½"	2'- 0"		2'-10"	3 - 6½"
24"					3'- 0"	0'- 6"	4'- 3½"	5'- 0"	3'- 0"	0'- 6"	4'- 7"	5 - 3 "
30"					3'- 6"	0'- 9"	4'-10½"	5'- 7"	3'- 6"	0'- 9"	5'- 2"	5 - 10"
36"					4'- 0"	1'- 0"	5'- 5½"	6'- 2"	4'- 0"	1'- 0"	5'- 9"	6 - 3 "
42"					4'- 6"	1'- 3"	6'-½	6'- 8"	4'- 6"	1'- 3"	6'- 4"	7 - 0 "
48"					5'- 0"	1'- 6"	6'- 7½"	7'- 3"	5'- 0"	1'- 6"	6'- 11"	7 - 7 "
54"					5'- 6"	1'- 9"	7'- 2½"	7'-10"	5'- 6"	1'- 9"	7'- 6"	8 - 2 "
60"					6'- 0"	2'- 0"	7'- 9½"	8'- 5"	6'- 0"	2'- 0"	8'- 1"	8 - 9 "

DATE	REVISION	BY

DEPARTMENT OF TRANSPORTATION
STATE OF GEORGIA

STANDARD PRECAST DROP INLETS

SCALE AS SHOWN — AUG. 1999

DESIGNED ____ (SUBMITTED) James H. Kemp
DRAWN ____ STATE ROAD & AIRPORT DESIGN ENGINEER
TRACED ____ (APPROVED) Fred L. Gadsden
CHECKED ____ CHIEF ENGINEER

NUMBER 1019A PRECAST