STATE	PROJECT NUMBER	SHEET NO.	TOTAL SHEETS
GA.	BRMLB-9004-00(008)	499	701

NOTE: MAINTAIN 2" CLEARANCE TO ALL REINFORCING, UNLESS NOTED OTHERWISE.

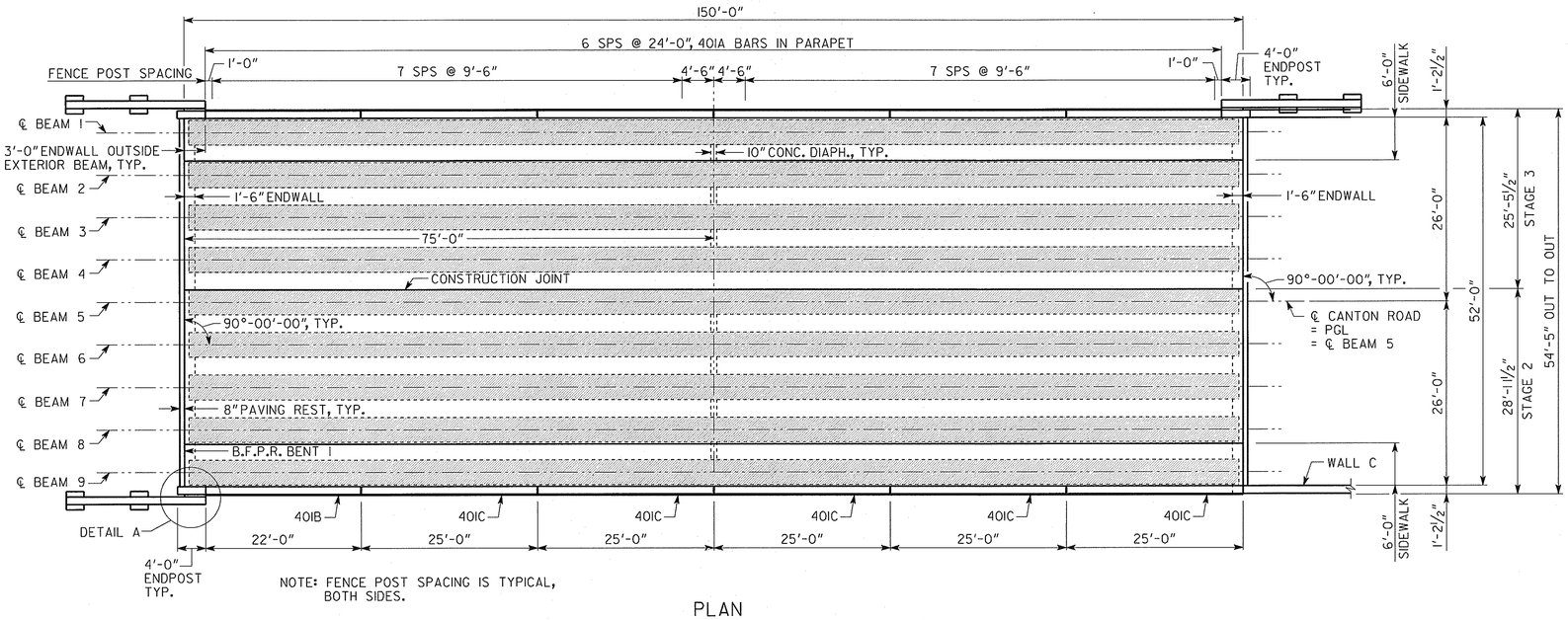

NOTE: FENCE POST SPACING IS TYPICAL, BOTH SIDES.

PLAN

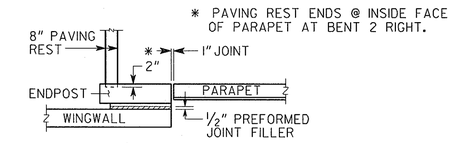

DETAIL A

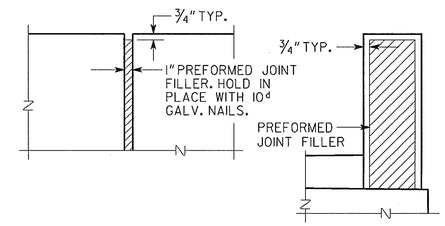

ELEVATION SIDE ELEVATION

DETAIL OF 1" EXPANSION JOINT IN PARAPET

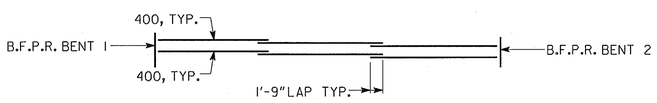

400 BAR LAP DETAIL

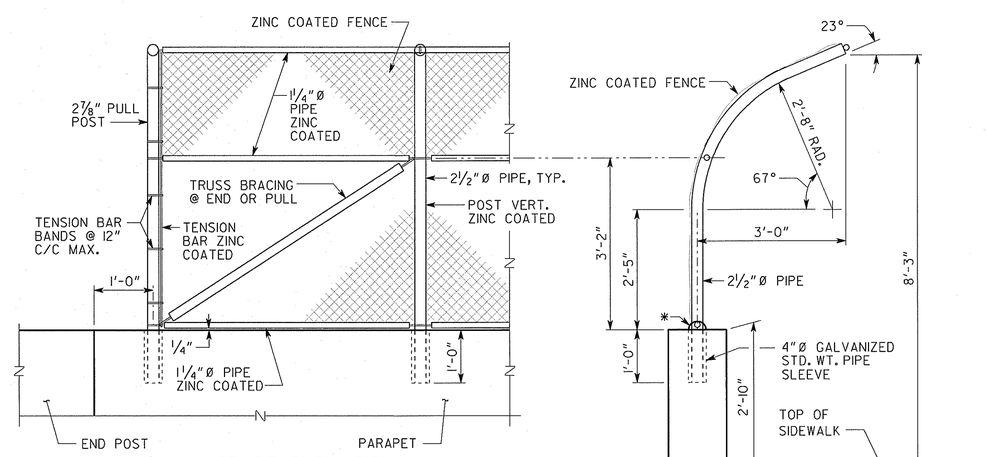

FENCE ELEVATION

FENCE POST DETAIL

* NON-SHRINK PORTLAND CEMENT GROUT, TROWEL TO PROVIDE POSITIVE DRAINAGE.

PLACE TRANSVERSE SIDEWALK MARKINGS ON SIDEWALK SPACED AT 5'-0"±.

COST OF BOND BREAKER AND EPOXY ADHESIVE TO BE INCLUDED IN PRICE BID FOR SUPERSTRUCTURE ITEMS.

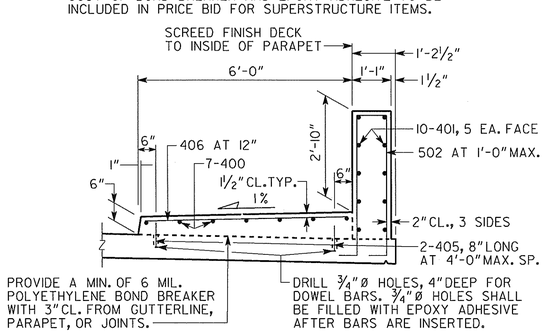

SIDEWALK AND PARAPET DETAILS FOR FENCE ATTACHMENT

FENCE NOTES:

1. FENCE SHALL BE 9 GAGE CHAIN LINK ZINC COATED TWO INCH SECURITY FENCE.
2. 4" Ø GALVANIZED SLEEVE SHALL BE CAST IN THE PARAPET. NON-SHRINK GROUT SHALL BE ALLOWED TO CURE FOR THREE DAYS BEFORE FENCE FABRIC IS INSTALLED.
3. COAT ENDS OF PIPE SLEEVE WITH A GALVANIZING REBAR COMPOUND IN ACCORDANCE WITH SECTION 645.
4. FOR POST SPACING, SEE ABOVE.
5. FOR FURTHER DETAILS, SEE GEORGIA DOT SPECIFICATIONS SECTIONS 643 AND 894.
6. FABRIC SHALL BE FASTENED TO POST AT INTERVALS NOT GREATER THAN 14".
7. PROVIDE EXPANSION SLEEVE FOR ALL RAILS TO MATCH SUPERSTRUCTURE JOINTS.

SUPERSTRUCTURE QUANTITIES	
ITEM	TOTAL
LUMP - CY SUPERSTR CONCRETE, CLASS AA	362.5
LUMP - LB SUPERSTR REINF STEEL	56515

NOTE: END POST CONCRETE AND REINFORCING STEEL ARE INCLUDED IN QUANTITIES SHOWN.

BRIDGE NO. 2

ARCADIS
2849 PACES FERRY ROAD, SUITE 400
ATLANTA, GEORGIA 30339
TEL: 770/431-8666 FAX: 770/435-2666

GEORGIA
DEPARTMENT OF TRANSPORTATION
PRECONSTRUCTION DIVISION-OFFICE OF BRIDGE DESIGN

DECK PLAN
CR 4455 (CANTON ROAD) OVER SR 3

COBB COUNTY BRMLB-9004-00(008)

SCALE: NO SCALE JULY 2010

DRAWING NO.	REVISIONS	BY	DATE
35-24			
BRIDGE SHEET 5 OF 13			

DESIGNED	MDM	CHECKED	JPT	REVIEWED	WEI/WMD
DRAWN	MLF	DESIGN GROUP	RAG	APPROVED	PVL

Filename: g:\tra\62571-62\bridge\drawings\new canton rd\canton-dp.dgn
Date: 2/8/2011 Time: 5:07:57 PM
User Name: kbaker