STATE	PROJECT NUMBER	SHEET NO.	TOTAL SHEETS
GA.	BRMLB-9004-00(008)	490	701

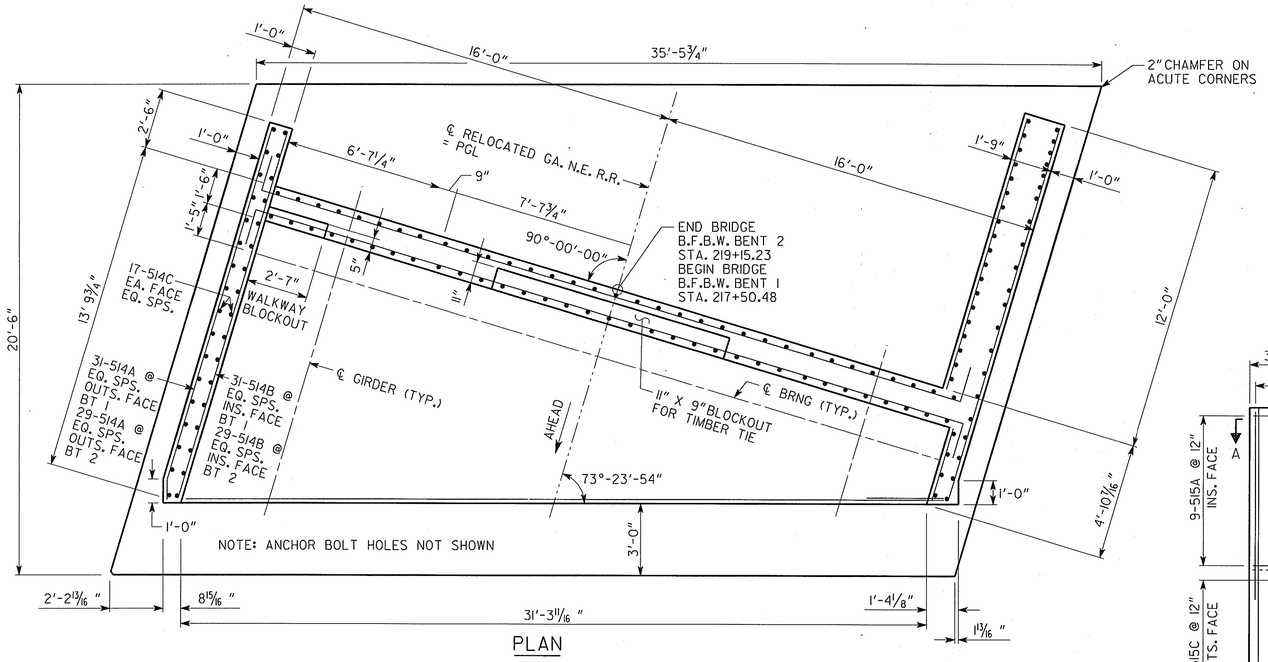

PLAN

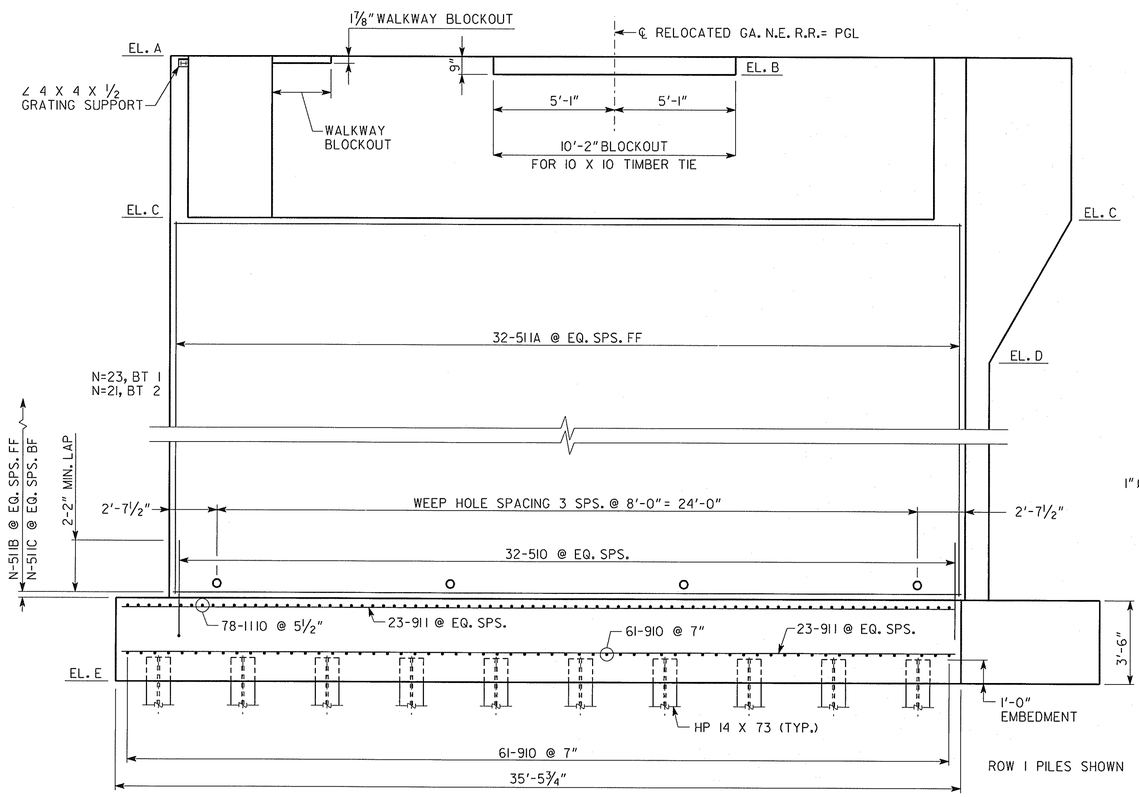

ELEVATION
ABUTMENT 1 LOOKING BACK

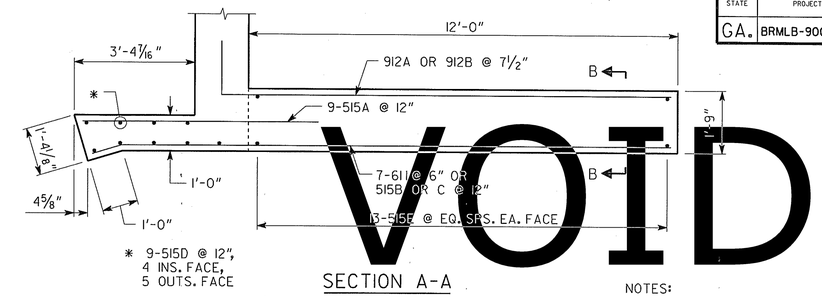

SECTION A-A

VOID

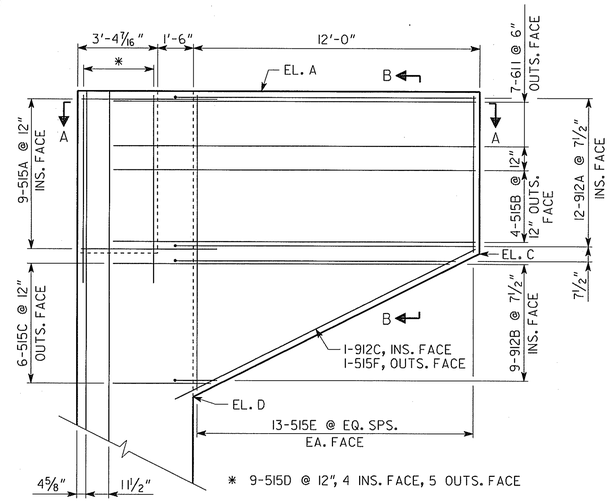

LT WINGWALL ELEVATION
LOOKING @ OUTSIDE FACE
BENT 1

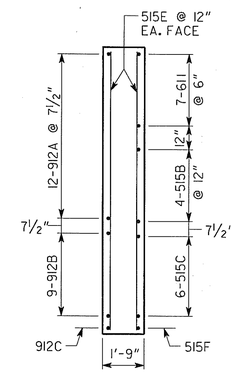

SECTION B-B

NOTES:

1. ABUTMENTS 1 AND 2 ARE SIMILIAR BY ROTATION EXCEPT FOR ELEVATIONS.
2. MAINTAIN 3" CL. ON ALL FOOTING REINFORCEMENT. MAINTAIN 2" CL. ON ALL OTHER REINFORCEMENT.
3. SHIFT OR CUT REINFORCING STEEL AS NECESSARY TO MAINTAIN COVER OR TO PLACE BARS.
4. TIMBER TIE SHALL BE A CREOSOTED OAK TIMBER BRIDGE TIE. IT SHALL BE ANCHORED TO THE BACKWALL BY 3 - 1" DIA. GALVANIZED ANCHOR BOLTS.
5. WALKWAY GRATING SUPPORT ∠ 4 X 4 X ½ SHALL BE BOLTED TO THE END OF THE CHEEKWALL TO SUPPORT THE WALKWAY GRATING WHEN IT CONFLICTS WITH THE CHEEKWALL.
6. TOP OF ABUTEMENT CHEEKWALL SHALL MATCH THE GRADE OF THE WALKWAY. SEE WALKWAY DETAIL SHEETS.

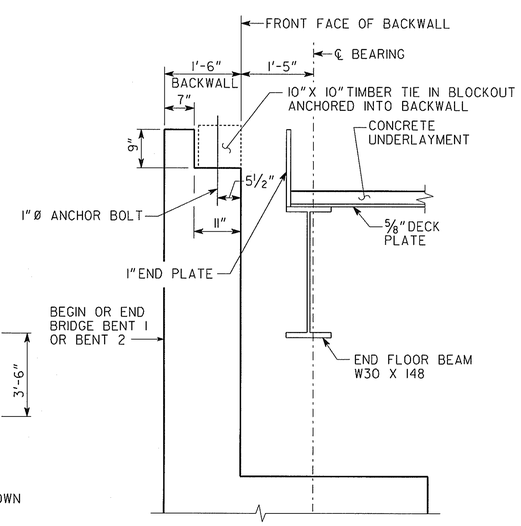

SECTION DECK JOINT

PLAN DRIVING OBJECTIVE

ALL PILES SHALL BE DRIVEN TO A DRIVING RESISTANCE OF 117 TONS AFTER MINIMUM TIP ELEVATIONS OF 1135 AT BENT 1 AND 1135 AT ABUTMENT 2 ARE ACHIEVED.

ALL PILES SHALL BE STEEL H, HP 14 X 89

TABLE OF ELEVATIONS

ELEVATIONS	ABUTMENT 1	ABUTMENT 2
A	1181.91	1178.47
B	1181.16	1177.72
C	1174.94	1171.85
D	1169.14	1166.05
E	1149.50	1148.50

SUBSTRUCTURE QUANTITIES

ITEM	BENT 1	BENT 2
CLASS AA-1 CONCRETE, CY	367.5	345.4
BAR REINF STEEL, LB	38,477	38,177

BRIDGE NO. 1

ARCADIS
2849 PACES FERRY ROAD, SUITE 400
ATLANTA, GEORGIA 30339
TEL: 770/431-8666 FAX: 770/435-2666

GEORGIA
DEPARTMENT OF TRANSPORTATION
PRECONSTRUCTION DIVISION-OFFICE OF BRIDGE DESIGN

ABUTMENTS
GA. N.E. RAILROAD OVER SR 3

COBB COUNTY — BRMLB-9004-00(008)

SCALE: NO SCALE — JULY 2010

DESIGNED	WDM	CHECKED	WDM	REVIEWED	WEI/WMD
DRAWN	MLF	DESIGN GROUP	RAG	APPROVED	PVL

REVISIONS — DATE — BY

DRAWING NO. 35-15
BRIDGE SHEET 15 OF 19

Filename: gx\tro\6257h-62\bridge\drawings\new railroad\railroad-eb.dgn
Date: 2/8/2011 Time: 5:28:49 PM
User Name: kbaker