STATE	PROJECT NUMBER	SHEET NO.	TOTAL SHEETS
GA.	BRMLB-9004-00(008)	489	701

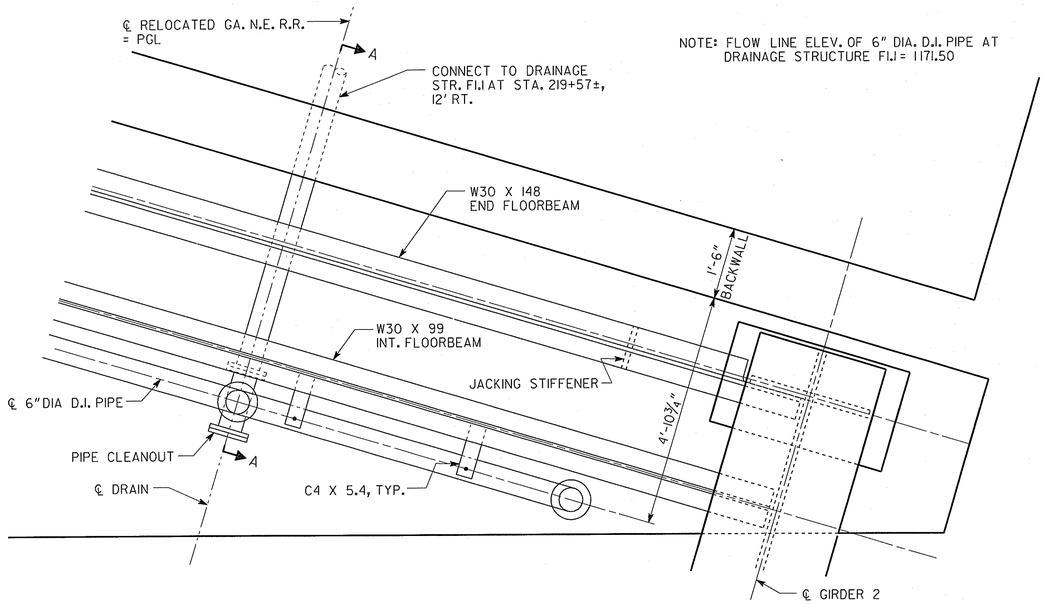

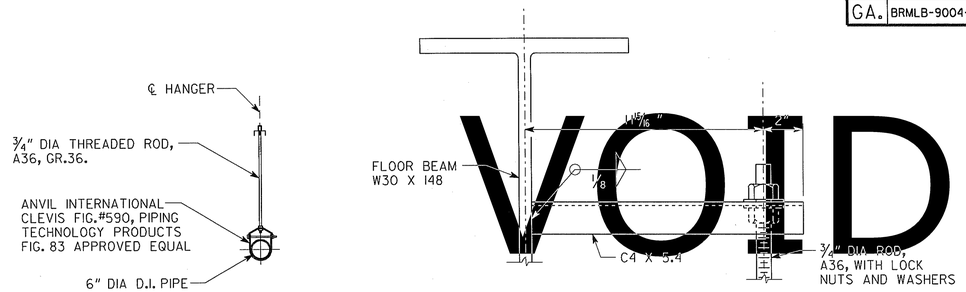

PIPE HANGER DETAILS

NOTES:

1. ALL PIPES AND FITTINGS SHALL BE DUCTILE IRON, CONFORMING TO GEORGIA DOT SPECIFICATION SECTION 841.
2. ALL BENDS SHALL BE SHORT RADIUS.
3. ALL HANGERS, RODS, BOLTS, INSERTS AND STRAPS SHALL BE GALVANIZED.

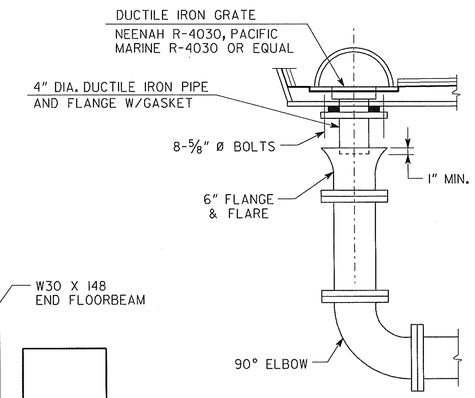

DRAIN DETAIL

ABUTMENT 2 PLAN

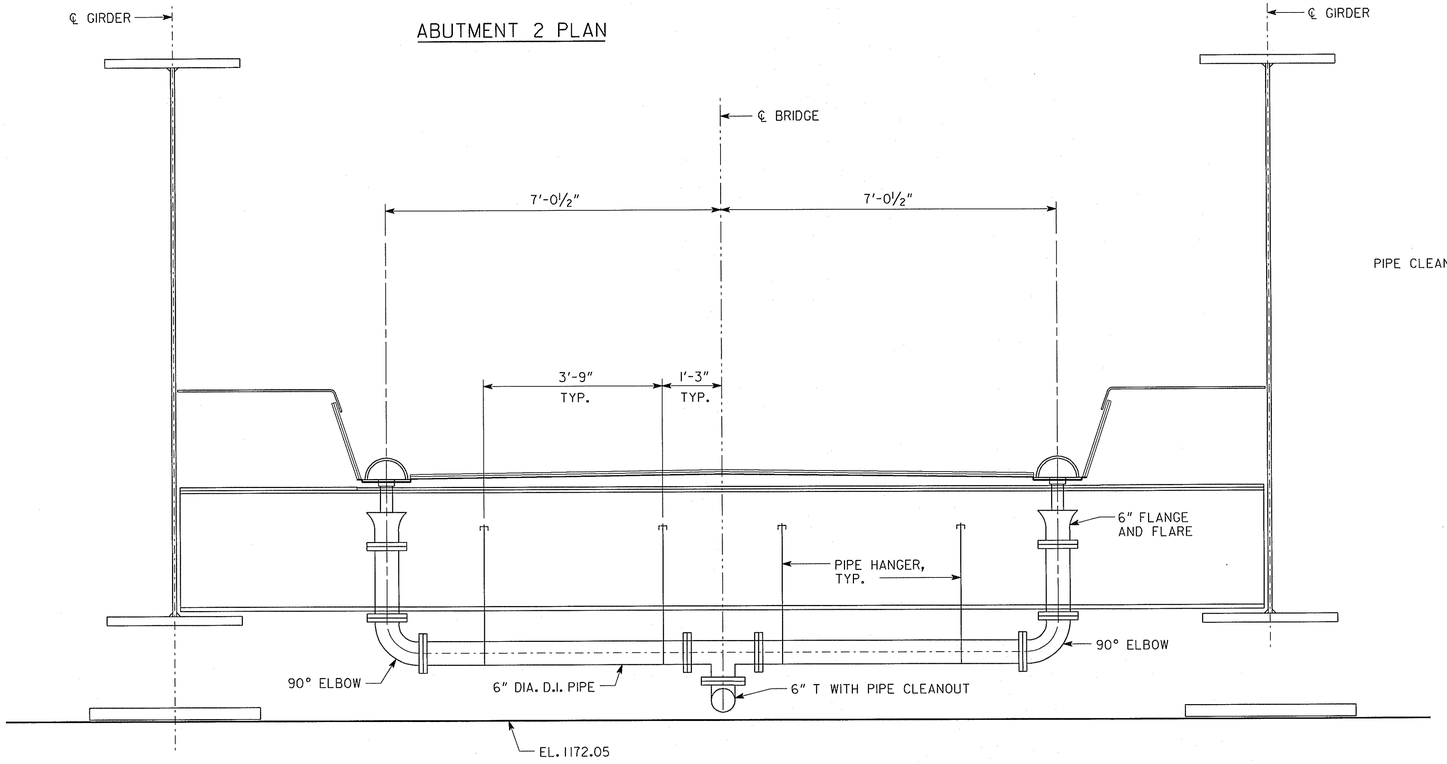

LOOKING AHEAD ABUTMENT 2

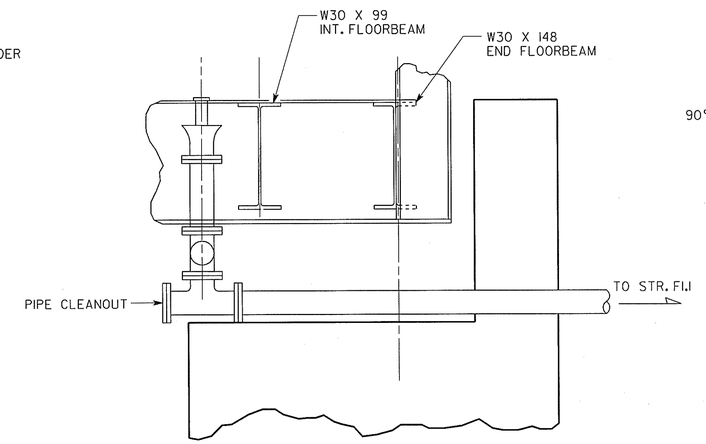

SECTION A-A
ABUTMENT 2

BRIDGE NO. 1

ARCADIS
2849 PACES FERRY ROAD, SUITE 400
ATLANTA, GEORGIA 30339
TEL: 770/431-8666 FAX: 770/435-2666

GEORGIA
DEPARTMENT OF TRANSPORTATION
PRECONSTRUCTION DIVISION-OFFICE OF BRIDGE DESIGN

DRAINAGE DETAILS
GA. N.E. RAILROAD OVER SR 3

COBB COUNTY — BRMLB-9004-00(008)

SCALE: NO SCALE — JULY 2010

DESIGNED	MDM	CHECKED	JPT	REVIEWED	WEI/WMD
DRAWN	MLF	DESIGN GROUP	RAG	APPROVED	PVL

DRAWING NO. 35-14

BRIDGE SHEET 14 OF 19

REVISIONS — DATE — BY

User Name: kbaker Date: 2/8/2011 Time: 5:28:49 PM Filename: g:\tro\6257I-62\bridge\drawings\new railroad\railroad-dd.dgn