STATE	PROJECT NUMBER	SHEET NO.	TOTAL SHEETS
GA.	BRMLB-9004-00(008)	485	701

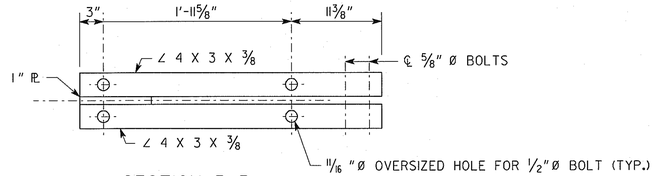

SECTION B-B

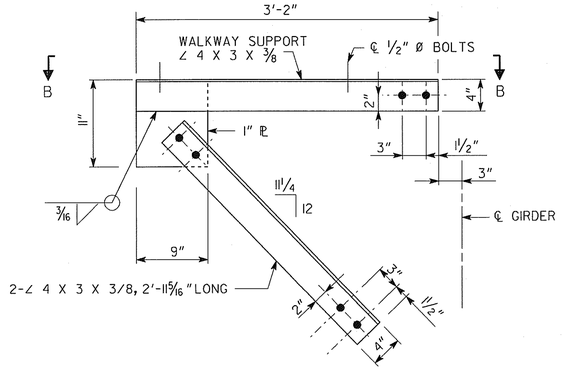

WALKWAY BRACKET DETAIL AT 1"X 34"END PLATE NEAR WEB

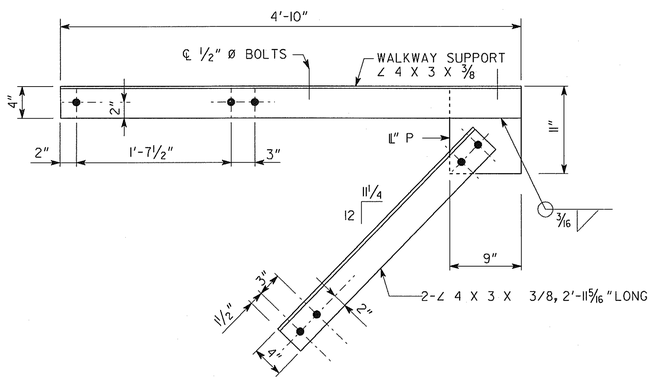

WALKWAY BRACKET DETAIL ON OUTSIDE 1"X 34"END PLATE

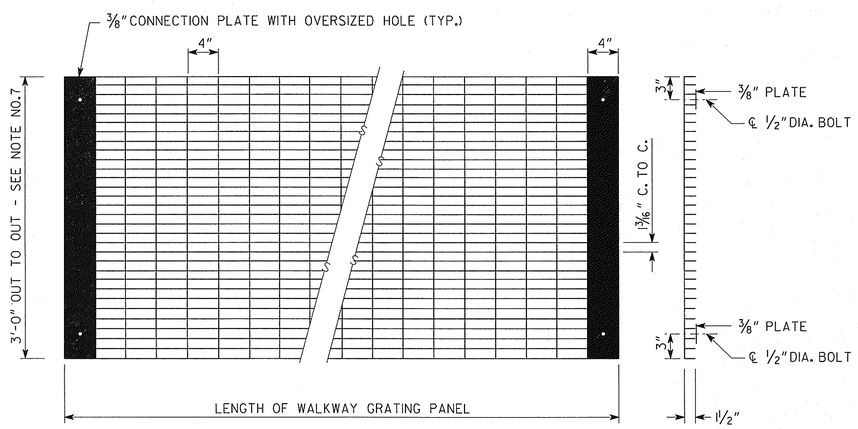

WALKWAY GRATING

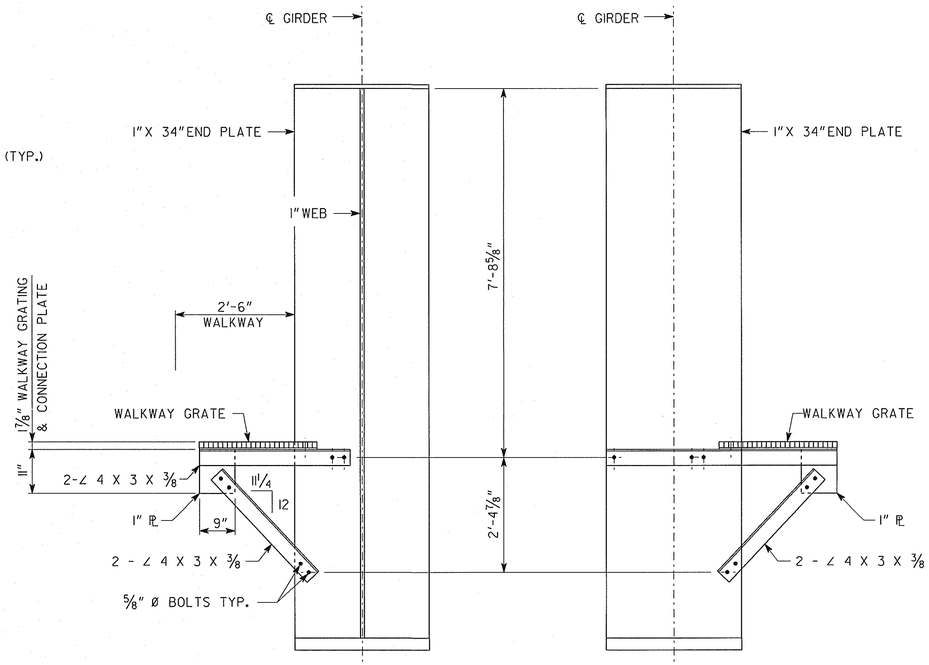

SECTION THRU WALKWAY AT 1"X 34"END PLATE LOOKING DOWN STATION

SECTION THRU WALKWAY AT 1"X 34"END PLATE LOOKING BACK STATION

NOTES:

1. MISC. STRUCTURAL STEEL SHALL CONFORM TO A.S.T.M. A36.
2. WALKWAY GRATING SHALL BE RECTANGULAR WELDED GRATING MADE OF A569 STEEL, HOT-DIPPED GALVANIZED AFTER FABRICATION. BEARING BARS ARE TO BE 1 1/2"X 3/16" @ 1-5/16" CENTERS AND TWISTED SQUARE BARS AT 4" CTRS.
3. NOTCH GRATING AROUND BEARING STIFFENER AT BEGIN AND END BRIDGE.
4. BOLT WALKWAY GRATING TO WALKWAY SUPPORT THROUGH THE 3/8" CONNECTION PLATE WITH 1/2" Ø A307 BOLTS AND LOCK WASHERS. BURR BOLT THREADS TO ENSURE BOLT DOES NOT LOOSEN.
5. SPACE WALKWAY BRACKETS @ 8'-0" WITH KNEE BRACING.
6. WALKWAY SUPPORT BOLTS SHALL BE 5/8" Ø A325 SC BOLTS.
7. WHEN THE WALKWAY CONFLICTS WITH THE CHEEKWALL, REMOVE 6" OF THE WALKWAY GRATING TO ALLOW IT TO FIT INSIDE THE CHEEKWALL. ALLOW A 1" GAP BETWEEN THE CHEEKWALL AND WALKWAY GRATING.

VOID

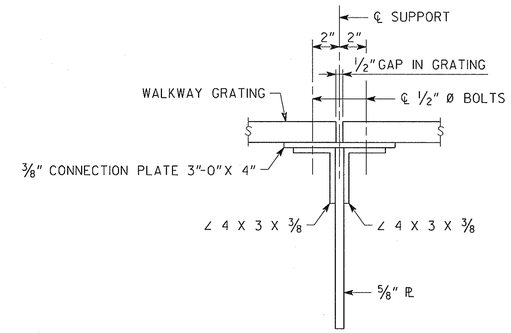

SECTION C-C

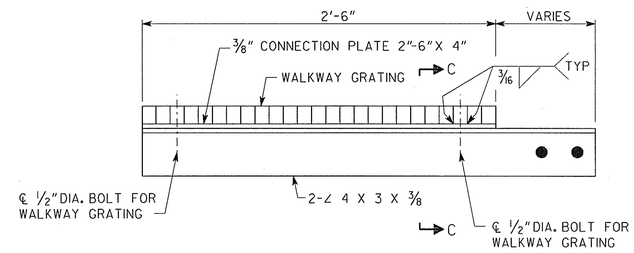

WALKWAY GRATING CONNECTION DETAIL

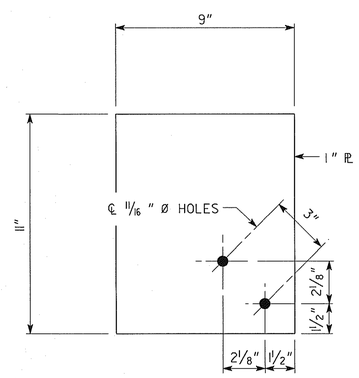

1" PLATE

BRIDGE NO. 1

ARCADIS
2849 PACES FERRY ROAD, SUITE 400
ATLANTA, GEORGIA 30339
TEL: 770/431-8666 FAX: 770/435-2666

GEORGIA
DEPARTMENT OF TRANSPORTATION
PRECONSTRUCTION DIVISION-OFFICE OF BRIDGE DESIGN

SUPERSTRUCTURE DETAILS
GA. N.E. RAILROAD OVER SR 3

COBB COUNTY — BRMLB-9004-00(008)

SCALE: NO SCALE — JULY 2010

DESIGNED	MDM	CHECKED	JPT	REVIEWED	WEI/WMD
DRAWN	MLF	DESIGN GROUP	RAG	APPROVED	PVL

REVISIONS — DATE — BY

DRAWING NO. 35-10

BRIDGE SHEET 10 OF 19

Filename: g:\tra\62571-62\bridge\drawings\new railroad\railroad-sd4.dgn
Date: 2/8/2011 Time: 5:26:48 PM
User Name: kbaker