STATE	PROJECT NUMBER	SHEET NO.	TOTAL SHEETS
GA.	BRMLB-9004-00(008)	484	701

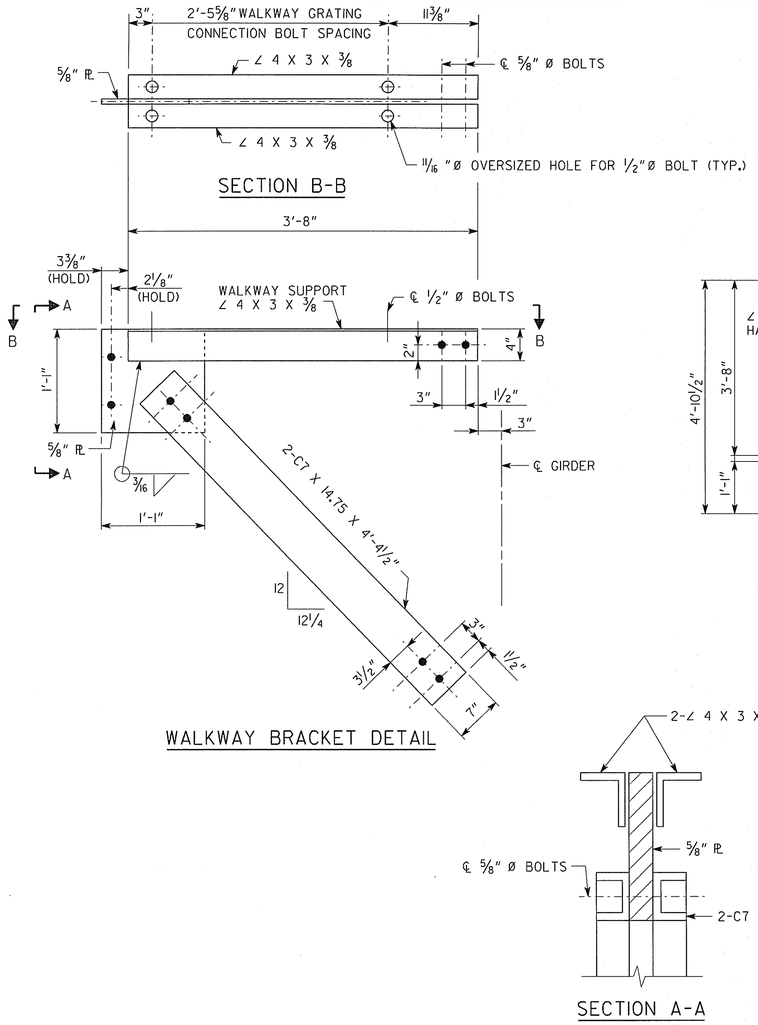

WALKWAY BRACKET DETAIL

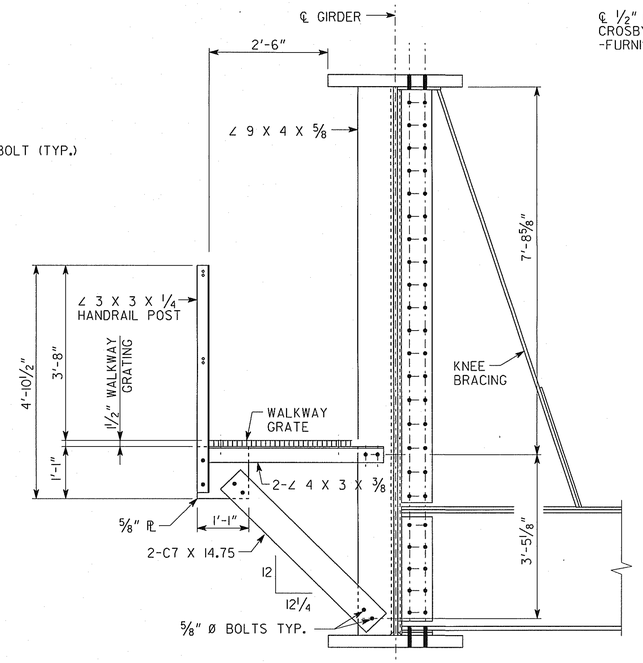

SECTION THRU WALKWAY AT INTERMEDIATE STIFFENER

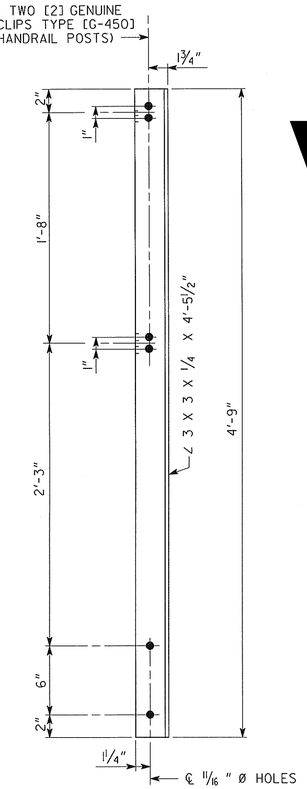

HANDRAIL POST

NOTES:

1. MISC. STRUCTURAL STEEL SHALL CONFORM TO A.S.T.M. A36.
2. WALKWAY GRATING SHALL BE RECTANGULAR WELDED GRATING MADE OF A569 STEEL, HOT-DIPPED GALVANIZED AFTER FABRICATION. BEARING BARS ARE TO BE 1-½" X 3/16" @ 1-3/16" CENTERS AND TWISTED SQUARE BARS AT 4" CTRS.
3. NOTCH GRATING AROUND BEARING STIFFENER AT BEGIN AND END BRIDGE.
4. BOLT WALKWAY GRATING TO WALKWAY SUPPORT THROUGH THE ⅜" CONNECTION PLATE WITH ½" Ø A307 BOLTS AND LOCK WASHERS. BURR BOLT THREADS TO ENSURE BOLT DOES NOT LOOSEN.
5. SPACE WALKWAY BRACKETS @ 8'-0" WITH KNEE BRACING.
6. WALKWAY SUPPORT BOLTS SHALL BE ⅝" Ø A325 SC BOLTS.

VOID

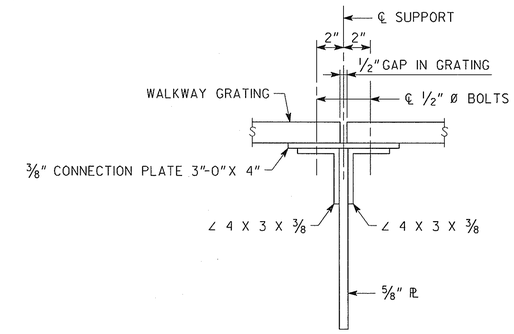

SECTION C-C

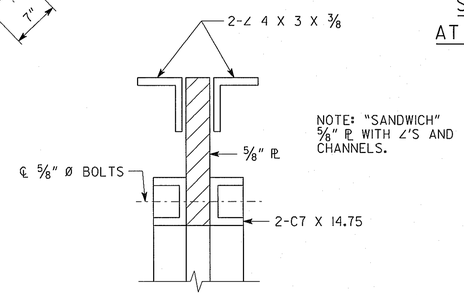

SECTION A-A

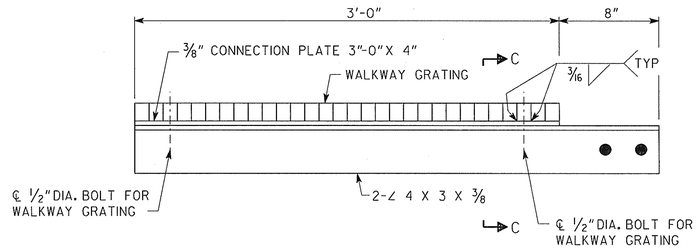

WALKWAY GRATING CONNECTION DETAIL

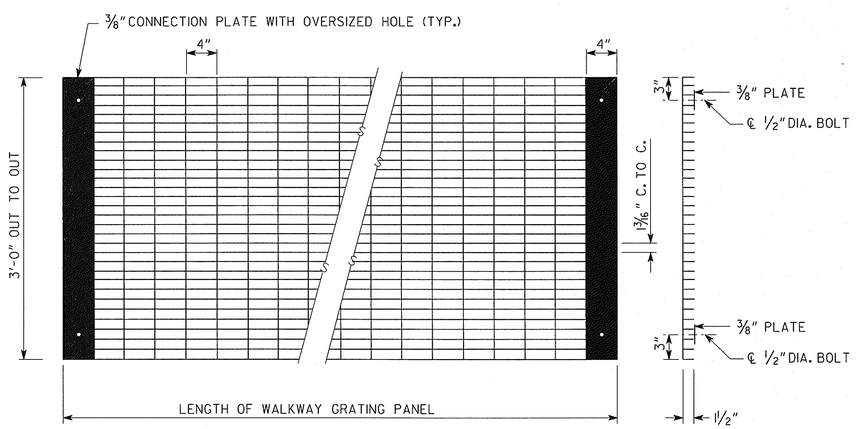

WALKWAY GRATING

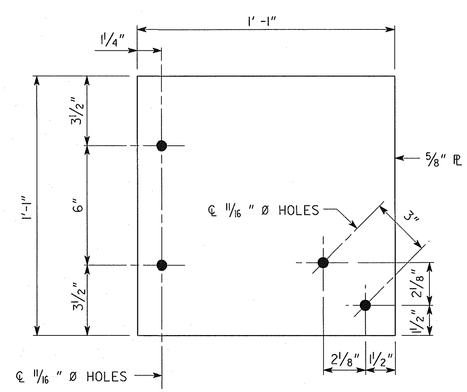

⅝" PLATE

BRIDGE NO. 1

ARCADIS
2849 PACES FERRY ROAD, SUITE 400
ATLANTA, GEORGIA 30339
TEL: 770/431-8666 FAX: 770/435-2666

GEORGIA
DEPARTMENT OF TRANSPORTATION
PRECONSTRUCTION DIVISION-OFFICE OF BRIDGE DESIGN

SUPERSTRUCTURE DETAILS
GA. N.E. RAILROAD OVER SR 3

COBB COUNTY — BRMLB-9004-00(008)

SCALE: NO SCALE — JULY 2010

DRAWING NO.	REVISIONS	BY	DATE
35-09			
BRIDGE SHEET 9 OF 19			

DESIGNED	MDM	CHECKED	JPT	REVIEWED	WEI/WMD
DRAWN	MLF	DESIGN GROUP	RAG	APPROVED	PVL

Filename: g:\tra\6257h-62\bridge\drawings\new railroad\railroad-sd3.dgn
Date: 2/8/2011 Time: 5:28:48 PM
User Name: kbaker