STATE	PROJECT NUMBER	SHEET NO.	TOTAL SHEETS
GA.	BRMLB-9004-00(008)	483	701

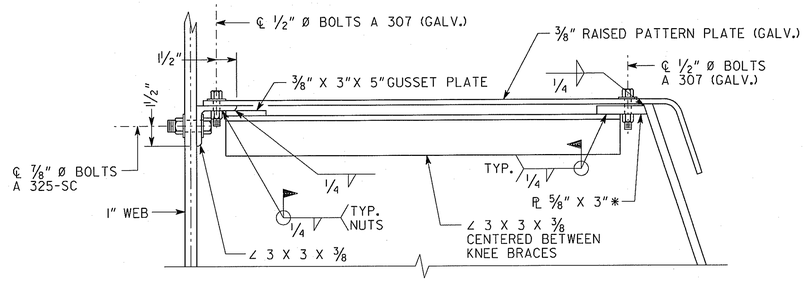

DETAIL BETWEEN KNEE BRACES

* CONTINUOUS BETWEEN KNEE BRACES

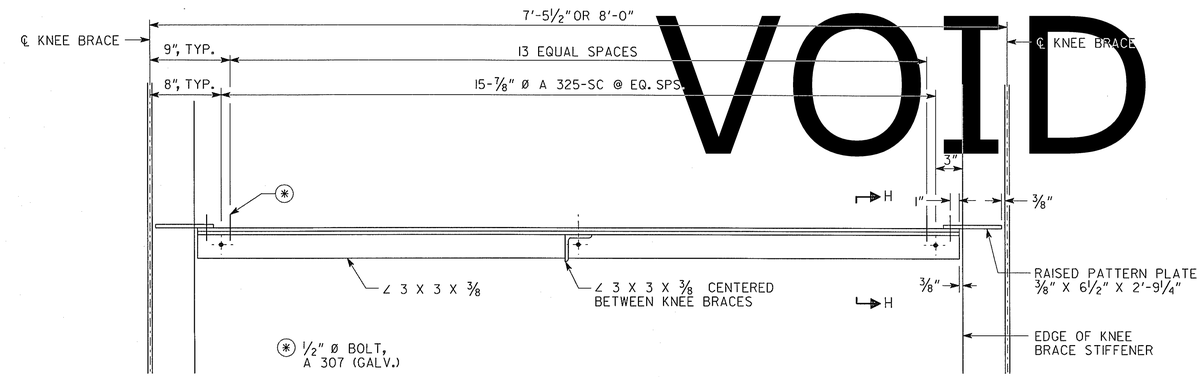

SECTION G-G

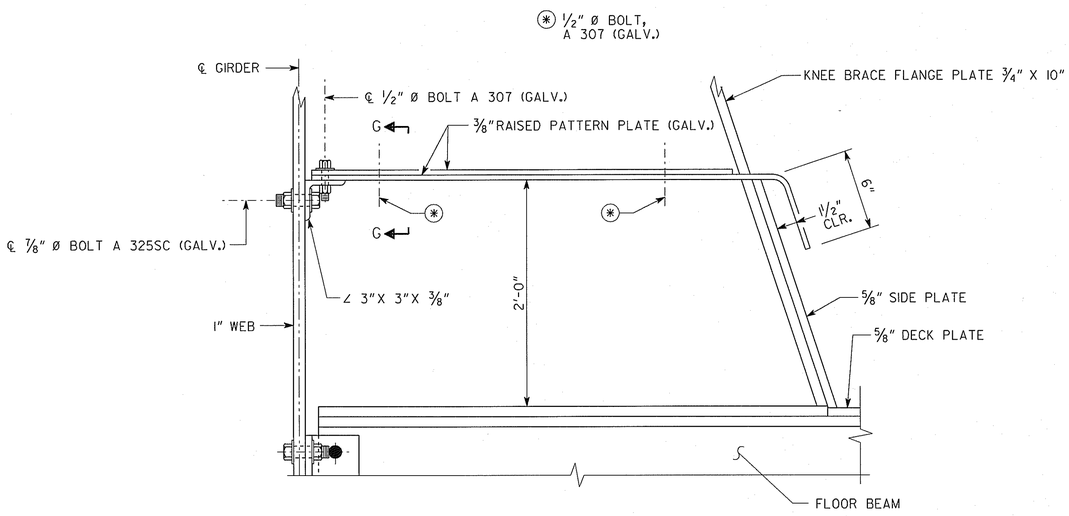

SECTION H-H

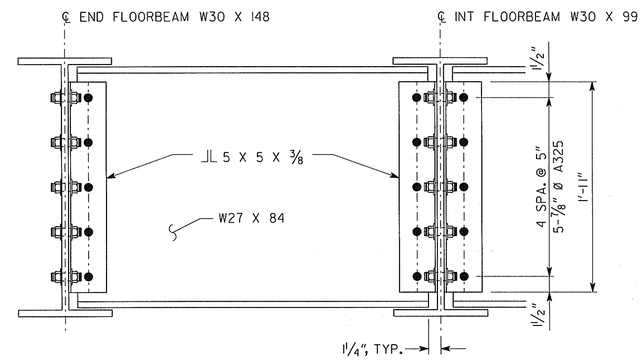

SECTION J-J

BALLAST AND RAILS OMMITTED FOR CLARITY

NOTE: FOR SECTION J-J SEE SHEET 5 OF 15.

NOTE:
ALL BOLTS SHALL BE A 325-SC - TYPE 3 UNLESS NOTED OTHERWISE.

BRIDGE NO. 1

ARCADIS
2849 PACES FERRY ROAD, SUITE 400
ATLANTA, GEORGIA 30339
TEL: 770/431-8666 FAX: 770/435-2666

GEORGIA
DEPARTMENT OF TRANSPORTATION
PRECONSTRUCTION DIVISION-OFFICE OF BRIDGE DESIGN

SUPERSTRUCTURE DETAILS
GA. N.E. RAILROAD OVER SR 3

COBB COUNTY BRMLB-9004-00(008)

SCALE: NO SCALE JULY 2010

DESIGNED	MDM	CHECKED	JPT	REVIEWED	WEI/WMD
DRAWN	MLF	DESIGN GROUP	RAG	APPROVED	PVL

DATE
REVISIONS
BY

DRAWING NO. 35-08
BRIDGE SHEET 8 OF 19

Filename: g:\tra\62571-62\bridge\drawings\new railroad\railroad-sd2.dgn
User Name: kbaker Date: 2/8/2011 Time: 5:28:48 PM