STATE	PROJECT NUMBER	SHEET NO.	TOTAL SHEETS
GA.	BRMLB-9004-00(008)	474	701

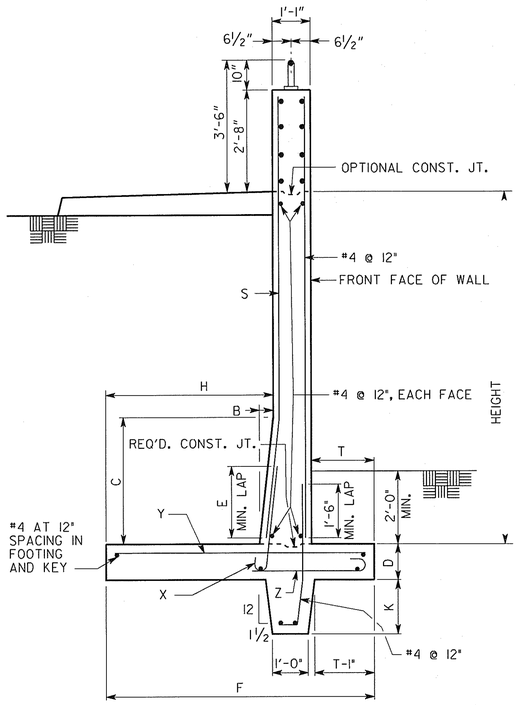

WALL SECTION WITH KEY

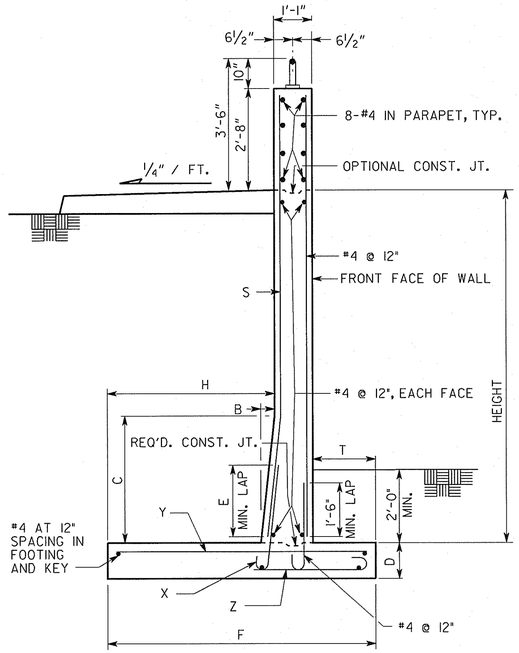

TYPICAL WALL SECTION

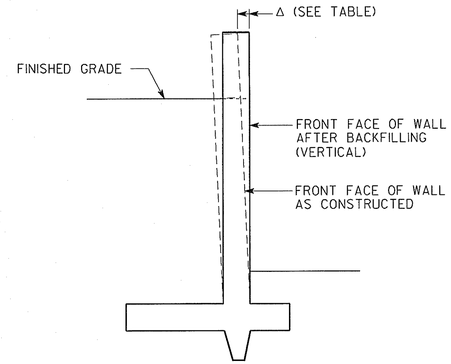

WALL BATTER DETAIL

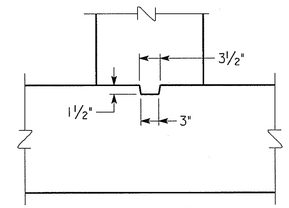

(FOR USE IN FOOTING AND CONTRACTION JOINT.)

SHEAR KEY DETAIL

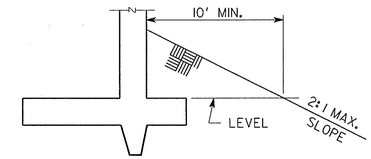

DETAIL FOR SLOPE IN FRONT OF WALL

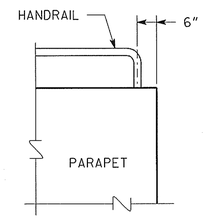

SECTION AT PARAPET

OPTION 1

SEE GA. STD. 3054 FOR GUARDRAIL ATTACHMENT DETAILS.

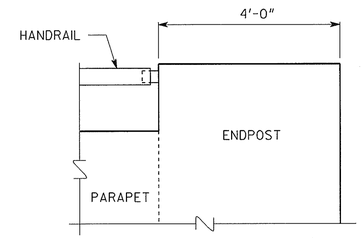

SECTION AT ENDPOST

OPTION 2

SEE GA. STD. 3054 FOR GUARDRAIL ATTACHMENT DETAILS.

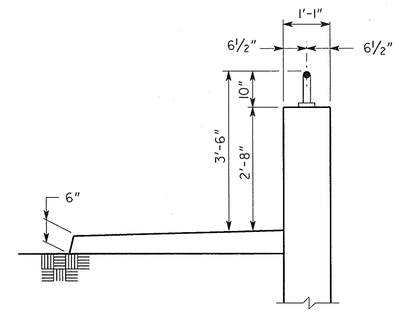

PARAPET AND HANDRAIL DETAIL

OPTION 1

SEE GA. STD. 3054 FOR GUARDRAIL ATTACHMENT DETAILS & GA. STD. 9031-R FOR HANDRAIL ATTACHMENT DETAILS. OPTION 1 SHALL BE USED UNLESS THE PLANS SPECIFY OPTION 2.

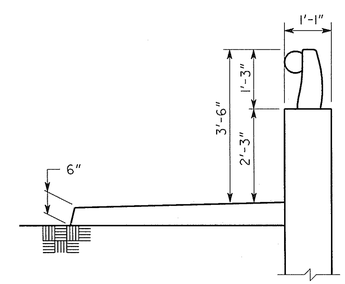

PARAPET AND HANDRAIL DETAIL

OPTION 2

SEE GA. STD. 3054 FOR GUARDRAIL ATTACHMENT DETAILS & GA. STD. 3626 FOR HANDRAIL DETAILS.

NOTES:

1. AT CONTRACTOR'S OPTION, SIDES OF KEY MAY BE VERTICAL. MAINTAIN WIDTH SHOWN AT TOP OF KEY.
2. PLACE WEEPHOLES AND SAND BLANKET AS SHOWN ON GA. STD. 4948B.
3. PROVIDE A TYPE III FINISH ON ALL EXPOSED CONCRETE SURFACES.
4. PROVIDE 1" EXPANSION JOINTS IN WALL STEM, FOOTING AND KEY AT A MAXIMUM SPACING OF 100'. SPACE EXPANSION JOINTS UNIFORMLY. STOP ALL LONGITUDINAL REINFORCEING STEEL IN THE STEM, FOOTING AND KEY 3" CLEAR OF THE EXPANSION JOINTS.
5. SPACE CONTRACTION JOINTS IN WALL STEM AT 30' MAXIMUM AND 20' MINIMUM. STOP ALL LONGITUDINAL REINFORCING STEEL IN THE STEM 2" CLEAR OF THE CONTRACTION JOINTS.
6. WATERPROOF EXPANSION AND CONTRACTION JOINTS IN THE WALL STEM ON THE BACK SIDE. EXTENT OF WATERPROOFING SHALL BE FROM TOP OF SAND BLANKET TO THE TOP OF FOOTING FOR 1'-6" MINIMUM EACH SIDE OF JOINT. SEE SECTION 530 OF THE GEORGIA DOT SPECIFICATIONS.
7. RETAINING WALL DESIGN DATA:
   SOIL PROPERTIES ---------- Φ = 28°
   γ = 110 pcf
   μ = 0.45
   CONCRETE ---------- CLASS A, f'_c = 3000 PSI
   REINFORCEMENT STEEL ---------- GRADE 60, f_y = 60,000 PSI
8. A GEOCOMPOSITE WALL DRAIN SELECTED FROM THE DEPARTMENT'S QUALIFIED PRODUCTS LIST IS AN ACCEPTABLE SUBSTITUTE FOR THE SAND BLANKET SHOWN IN THE DRAINAGE DETAILS.
9. MAINTAIN 2" COVER ON ALL REINFORCING STEEL IN THE STEM AND 3" COVER IN THE FOOTING AND KEY.
10. THE WALL WILL BE MEASURED ALONG THE INSIDE FACE OF PARAPET.
11. BACKFILL - PLACE BACKFILL ON FRONT FACE SIDE OF WALL BEFORE BACKFILLING BACK FACE SIDE OF WALL.
12. RETAINING WALL WILL BE PAID FOR PER LINEAR FOOT PARAPET RETAINING WALL TYPE P1, P2 OR P3. INCLUDE COSTS FOR HANDRAIL, WATERPROOFING, EXCAVATION, BACKFILLING, DRAINAGE BLANKET, CONCRETE, REINFORCING STEEL AND ALL INCIDENTALS IN PRICE BID. PAYMENT WILL BE MADE UNDER ITEM NO. 500, PARAPET RETAINING WALL - TYPE P1, P2 OR P3.

⚠ NOTE:
PARAPET RETAINING WALL SHALL BE USED ONLY ADJACENT TO ROADWAY TYPICAL SECTIONS WITH CURB AND GUTTER AND SIDEWALKS. NOT TO BE USED ADJACENT TO ROADWAY SHOULDER, BICYCLE TRAFFIC OR FILL SLOPE.

WALL DIMENSIONS									REINFORCEMENT				Δ (INCHES)	DESIGN SOIL PRESSURE	TYPE
HEIGHT	B	C	D	E	F	H	T	K	S	X	Y	Z			
4'	0	0	1'-0"	2'-0"	5'-10"	3'-9"	1'-0"	0	#5 AT 12"	#5 AT 12"	#5 AT 13"	#4 AT 12"	0	2.0 KSF	P1
6'	0	0	1'-0"	2'-0"	6'-7"	4'-3"	1'-3"	0	#5 AT 11"	#5 AT 11"	#5 AT 12"	#4 AT 12"	⅛"	2.0 KSF	
8'	0	0	1'-0"	2'-9"	7'-4"	4'-9"	1'-6"	0	#6 AT 11"	#6 AT 11"	#5 AT 8"	#4 AT 12"	¼"	2.0 KSF	P2
10'	0	0	1'-3"	3'-9"	7'-10"	5'-0"	1'-9"	0	#7 AT 10"	#7 AT 10"	#6 AT 10"	#4 AT 12"	⅜"	2.5 KSF	
12'	6"	4'	1'-3"	3'-9"	8'-4"	5'-3"	2'-0"	6"	#7 AT 11"	#7 AT 11"	#6 AT 8"	#4 AT 8"	½"	3.0 KSF	P3
14'	6"	6'	1'-3"	6'-3"	9'-7"	5'-9"	2'-9"	12"	#9 AT 12"	#9 AT 12"	#8 AT 11"	#5 AT 9"	11/16"	3.0 KSF	

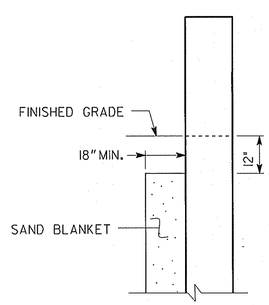

SAND BLANKET DETAIL

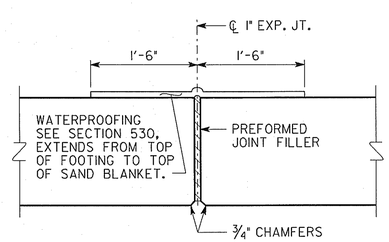

DETAIL OF EXPANSION JOINT

SCALE: 1" = 1'-0"

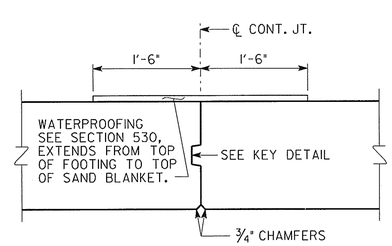

DETAIL OF CONTRACTION JOINT

SCALE: 1" = 1'-0"

REVISIONS		
BY	ADDED NOTE	DATE
SWW		07-07-04

GEORGIA
DEPARTMENT OF TRANSPORTATION
PRECONSTRUCTION DIVISION-OFFICE OF BRIDGE DESIGN

PARAPET RETAINING WALL
TYPE P1, P2 AND P3

DRAWING NO. 31-05
WALL SHEET 5 OF 5

NO SCALE (UNLESS NOTED) JULY 2003

DESIGNED SWW | CHECKED SWW | REVIEWED JPT/MCD
DRAWN KHM/WMC | DESIGN GROUP SWW | APPROVED PVL

FILENAME: TPP1-P3ENG.DGN