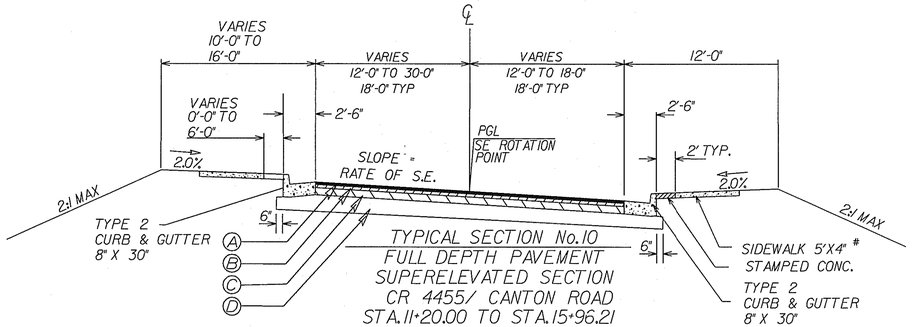

TYPICAL SECTION No.10
FULL DEPTH PAVEMENT
SUPERELEVATED SECTION
CR 4455/ CANTON ROAD
STA.11+20.00 TO STA.15+96.21
(BEGIN APPROACH SLAB)
(SEE SHEET 5-03 FOR EXCEPTION)

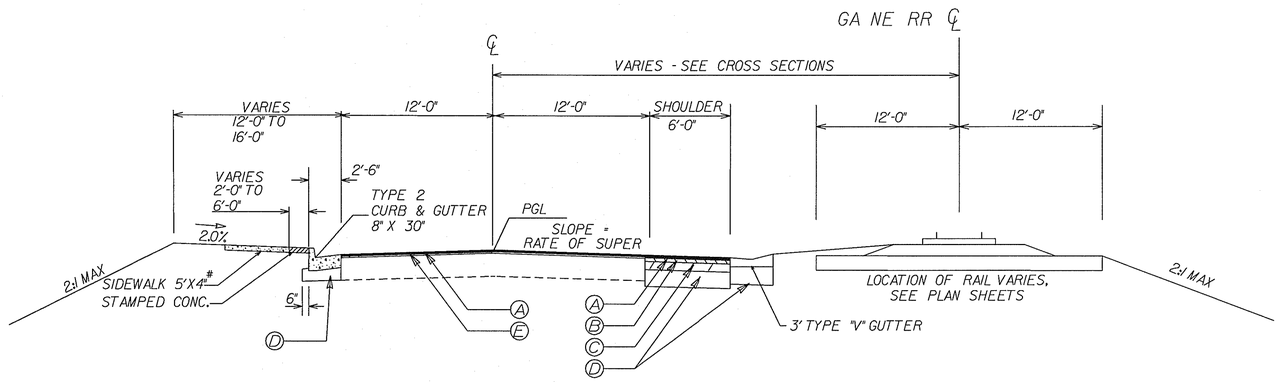

TYPICAL SECTION No.11
WIDENING /OVERLAY/ MILL & INLAY
NORMAL CROWN OR SUPERELEVATED SECTION
CR 4455/ CANTON ROAD
STA.23+50.00 TO STA.25+20.00

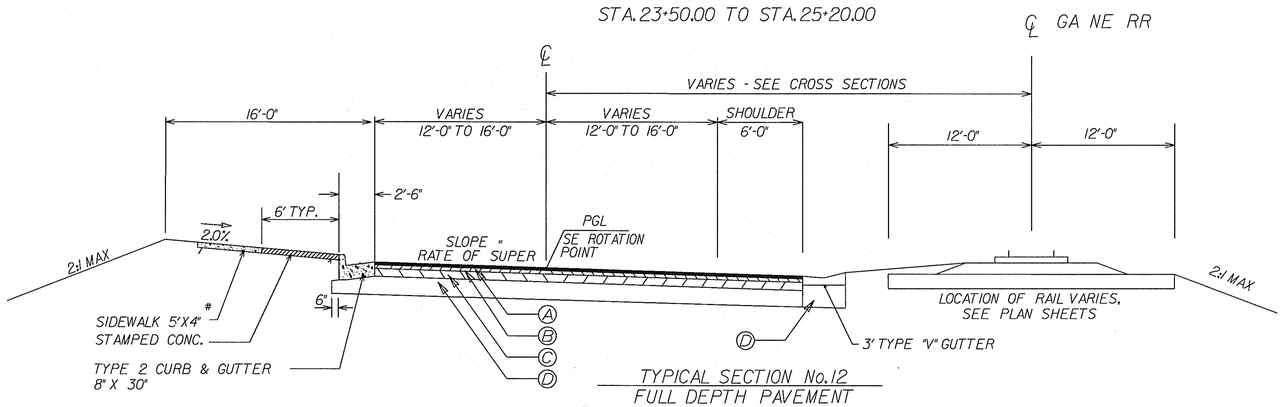

TYPICAL SECTION No.12
FULL DEPTH PAVEMENT
CR 4455/CANTON ROAD AND GA NE RR
STA.21+32.00 TO STA.23+50.00

NOTES APPLICABLE TO ALL SECTIONS

1. FOR SUPERELEVATION RATES AND LOCATION SEE ROADWAY PLANS.
2. LOCATION OF EXISTING PAVEMENT VARIES WITH RESPECT TO THE PROPOSED CONSTRUCTION CENTERLINE.
3. SEE ROADWAY PLANS FOR LOCATION OF CURB & GUTTER SECTION. SHOULDER MAY BE GRADED AWAY FROM ROADWAY TO FACILITATE THE SLOPE TIE TO EXISTING GROUND. SEE X-SECTIONS FOR LOCATION.

REQUIRED PAVEMENT

- (A) RECYCLED ASPH CONC 12.5 mm SUPERPAVE, GP 2 ONLY, INCL BITUM MATL & H LIME, 165 LBS/SQ YD
- (B) RECYCLED ASPH CONC 19 mm SUPERPAVE, GP 1 OR 2, INCL BITUM MATL & H LIME, 220 LBS/SQ YD
- (C) RECYCLED ASPH CONC 25 mm SUPERPAVE, GP 1 OR 2, INCL BITUM MATL & H LIME, 550 LBS/SQ YD
- (D) GR AGGR BASE CRS, 12 IN, INCL MATL
- (E) RECYCLED ASPH CONC LEVELING, INCL BITUM MATL & H LIME (AS REQUIRED)
- (F) MILL ASPH CONC PVMT, VARIABLE DEPTH

CONSTRUCT 8" THICK CONC SIDEWALK BETWEEN RADIUS RETURNS OF INTERSECTING ROADWAYS SEE CONSTRUCTION PLAN FOR SIDEWALK LOCATIONS

ARCADIS
Infrastructure, environment, facilities

REVISION DATES

STATE OF GEORGIA
DEPARTMENT OF TRANSPORTATION

TYPICAL SECTIONS

CANTON ROAD AND RR
BRIDGE OVER SR 3/US 41

DRAWING No.
5-04