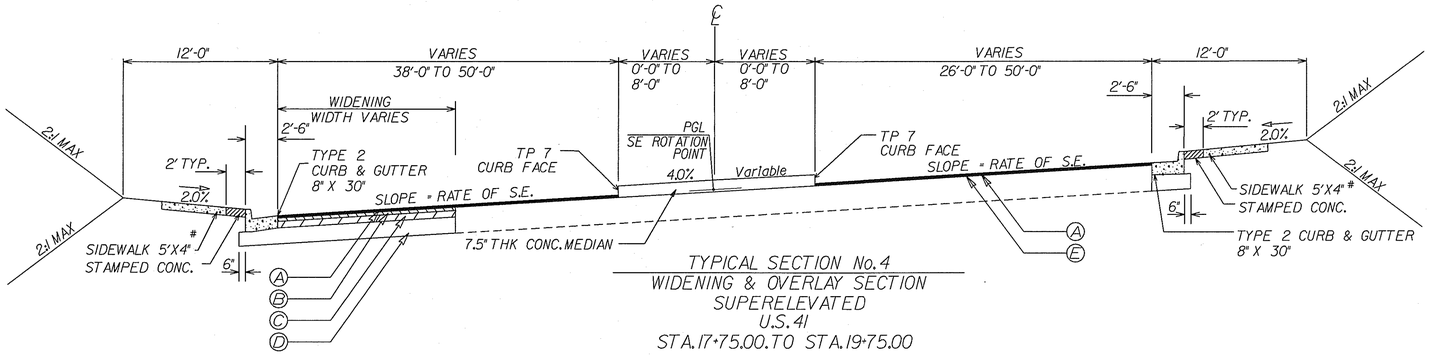


TYPICAL SECTION No.4
WIDENING & OVERLAY SECTION
SUPERELEVATED
U.S. 41
STA. 17+75.00 TO STA. 19+75.00

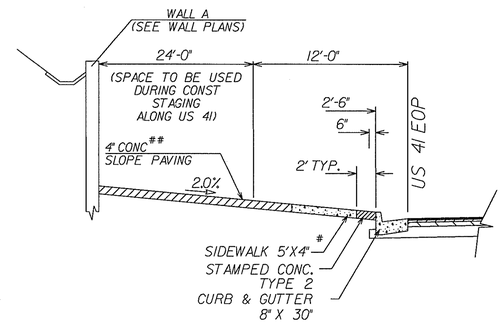


EXCEPTION No.2
U.S. 41
STA. 24+00 TO STA. 29+75.00 LT

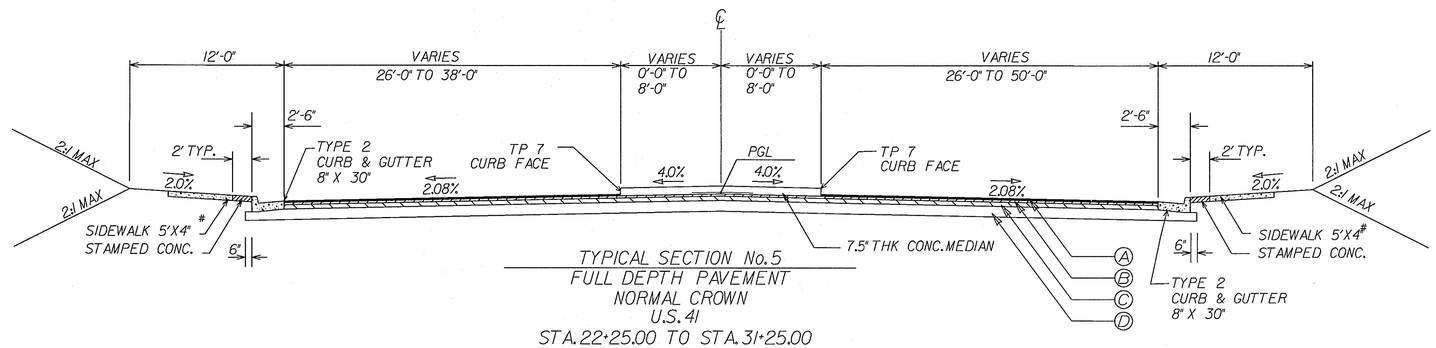


TYPICAL SECTION No.5
FULL DEPTH PAVEMENT
NORMAL CROWN
U.S. 41
STA. 22+25.00 TO STA. 31+25.00
(SEE THIS SHEET FOR EXCEPTIONS)

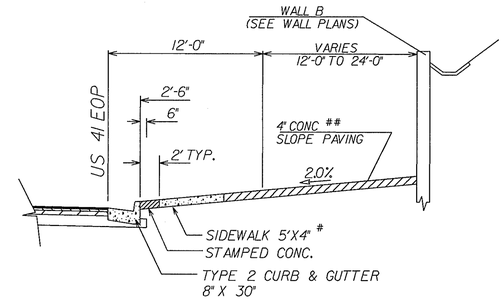


EXCEPTION No.3
U.S. 41
STA. 24+40 TO STA. 27+90.00 RT

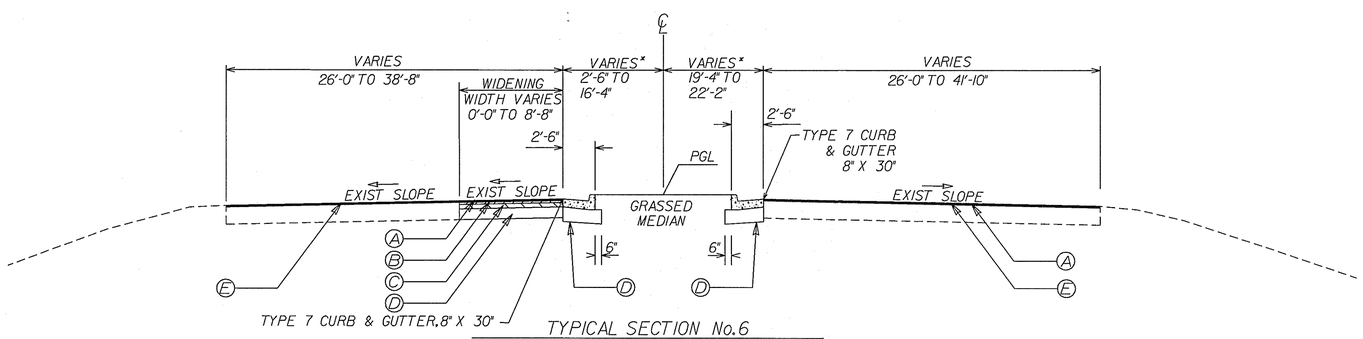


TYPICAL SECTION No.6
MEDIAN WIDENING (LT) & OVERLAY (RT)
NORMAL CROWN OR SUPERELEVATED
U.S. 41
STA. 36+41.01 TO STA. 39+66.30
(SEE SHEET 5-01 FOR EXCEPTIONS)

* SEE DETAIL ON 5-08 FOR TURN LANE ISLAND
\# CONSTRUCT 8" THICK CONC SIDEWALK BETWEEN RADIUS RETURNS OF INTERSECTING ROADWAYS. SEE CONSTRUCTION PLAN FOR SIDEWALK LOCATIONS
\## 4" CONC SLOPE PAVING IS APPLICABLE FROM STA 25+30 RT TO STA 26+70 RT & STA 25+30 LT TO STA 26+32 LT

## NOTES APPLICABLE TO ALL SECTIONS

1. FOR SUPERELEVATION RATES AND LOCATION SEE ROADWAY PLANS.
2. LOCATION OF EXISTING PAVEMENT VARIES WITH RESPECT TO THE PROPOSED CONSTRUCTION CENTERLINE.
3. SEE ROADWAY PLANS FOR LOCATION OF CURB & GUTTER SECTION. SHOULDER MAY BE GRADED AWAY FROM ROADWAY TO FACILITATE THE SLOPE TIE TO EXISTING GROUND. SEE X-SECTIONS FOR LOCATION.

## REQUIRED PAVEMENT

- (A) RECYCLED ASPH CONC 12.5 mm SUPERPAVE, GP 2 ONLY, INCL POLYMER-MODIFIED BITUM MATL & H LIME, 165 LBS/SQ YD
- (B) RECYCLED ASPH CONC 19 mm SUPERPAVE, GP 1 OR 2, INCL BITUM MATL & H LIME, 220 LBS/SQ YD
- (C) RECYCLED ASPH CONC 25 mm SUPERPAVE, GP 1 OR 2, INCL BITUM MATL & H LIME, 880 LBS/SQ YD
- (D) GR AGGR BASE CRS, 14 IN, INCL MATL
- (E) RECYCLED ASPH CONC LEVELING, INCL BITUM MATL & H LIME (AS REQUIRED)
- (F) MILL ASPH CONC PVMT, VARIABLE DEPTH
- (G) CONCRETE MEDIAN, 6 IN

ARCADIS
Infrastructure, environment, facilities

REVISION DATES

STATE OF GEORGIA
DEPARTMENT OF TRANSPORTATION

**TYPICAL SECTIONS**

CANTON ROAD AND RR
BRIDGE OVER SR 3/US 41

DRAWING No.
5-02

GPLN