STATE	PROJECT NUMBER	SHEET NO.	TOTAL SHEETS
GA.	BHNLB-9073-00(016) BRNLB-9073-00(018)	155	444

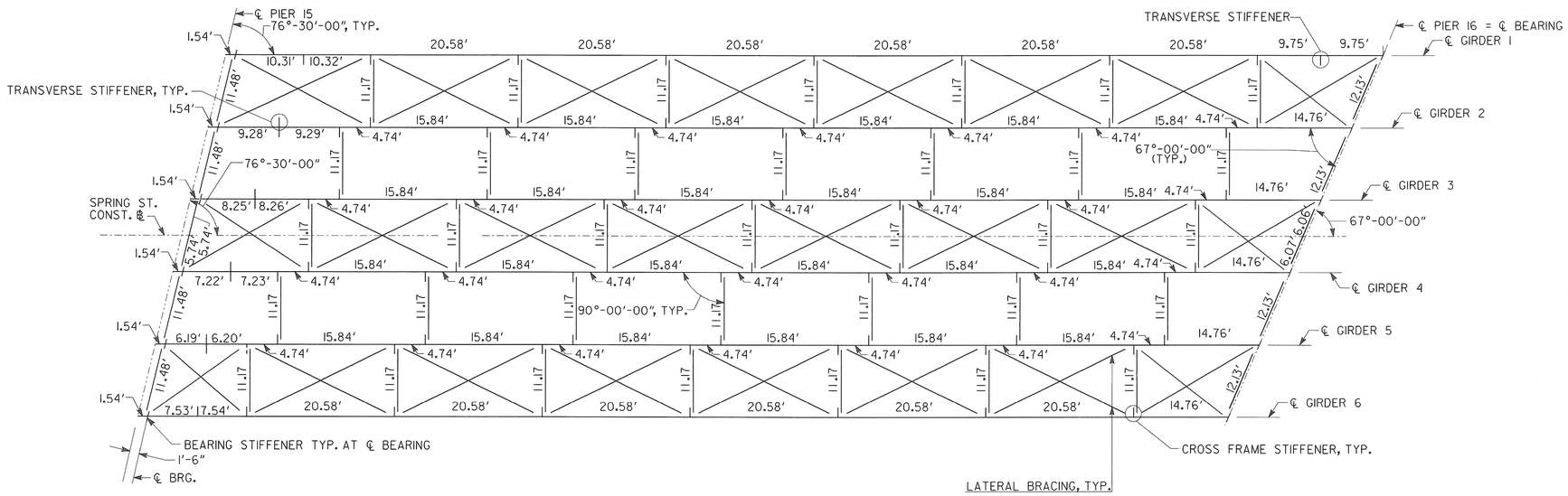

SPAN 16

NOTE:

ALL BEAMS ARE PARALLEL TO SPRING ST. CONST. ℄

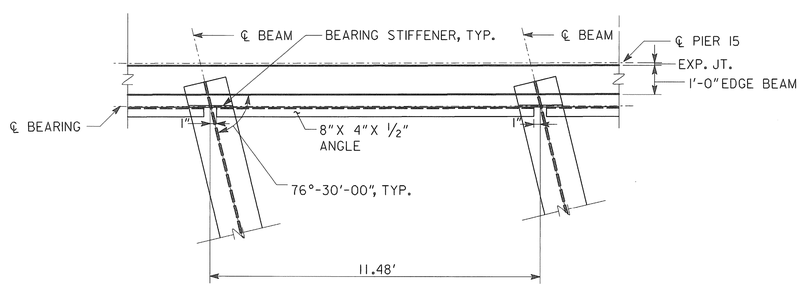

PIER 15 CROSS FRAME PLAN

NO SCALE

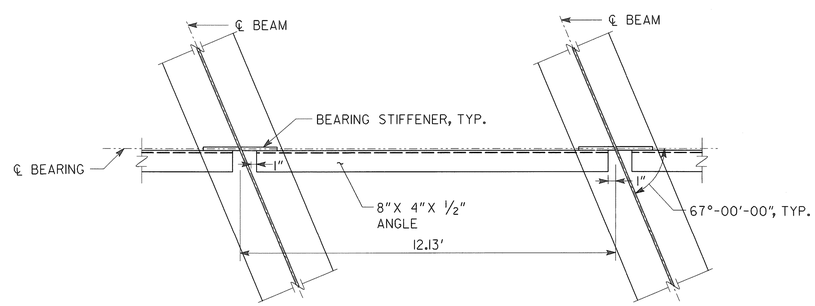

PIER 16 CROSS FRAME PLAN

NO SCALE

BRIDGE NO. 1

Heath & Lineback Engineers
INCORPORATED
2390 CANTON ROAD, BUILDING 200
MARIETTA, GEORGIA 30066-5393
(770)424-1668

GEORGIA
DEPARTMENT OF TRANSPORTATION
ENGINEERING DIVISION-OFFICE OF BRIDGES AND STRUCTURES

FRAMING PLAN
SPAN 16
SPRING STREET VIADUCT OVER
CSX TRANSPORTATION

FULTON COUNTY

BHNLB-9073-00(016)
BRNLB-9073-00(018)

SCALE: 1" = 10'-0"

JULY 2013

DRAWING NO. 35 - 038

BRIDGE SHEET 38 OF 79

BY	REVISIONS	DATE

DESIGNED KAK	CHECKED RLF/GBL	REVIEWED WMD/DLC
DRAWN JRL	DESIGN GROUP SWW	APPROVED BFR

1 INCH WHEN PRINTED FULL SIZE

JA 20110144 \ BRIDGE \ BRIDGE1 \ SS1FP3.DGN