| STATE | PROJECT NUMBER | SHEET NO. | TOTAL SHEETS |
|---|---|---|---|
| GA. | BHNLB-9073-00(016)<br>BRNLB-9073-00(018) | 148 | 444 |

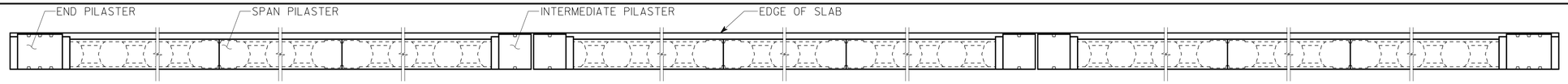


TYPICAL PARAPET PLAN

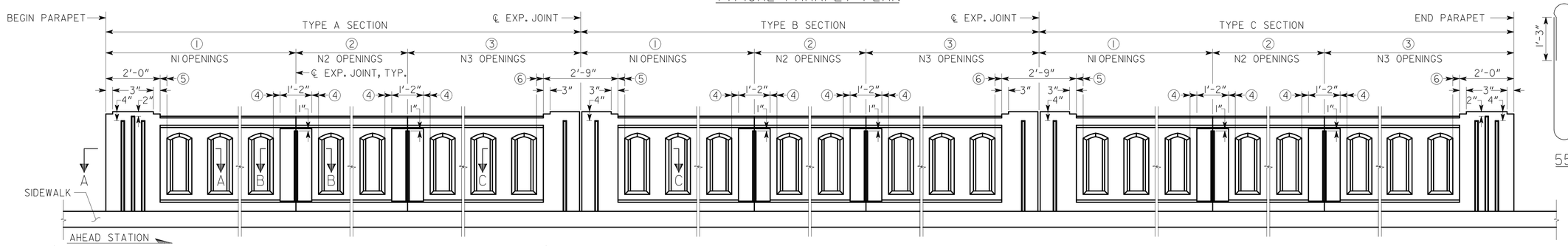


TYPICAL INTERIOR ELEVATION OF PARAPET

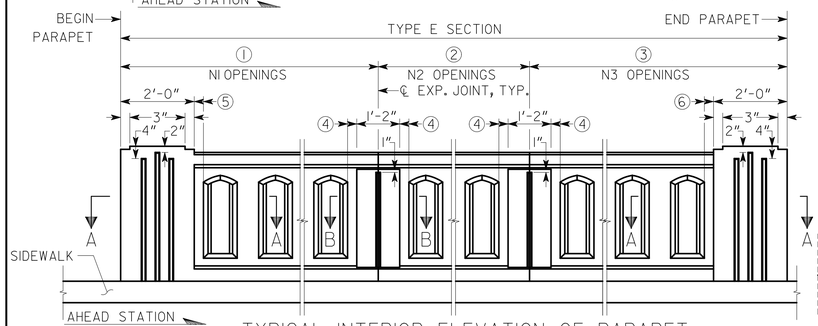


TYPICAL INTERIOR ELEVATION OF PARAPET

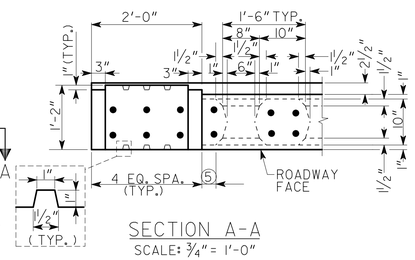


SECTION A-A
SCALE: ¾" = 1'-0"

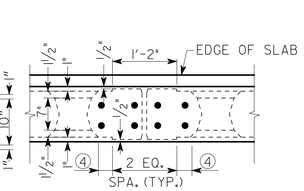


SECTION B-B
SCALE: ¾" = 1'-0"

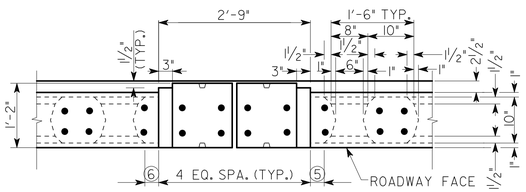


SECTION C-C
SCALE: ¾" = 1'-0"

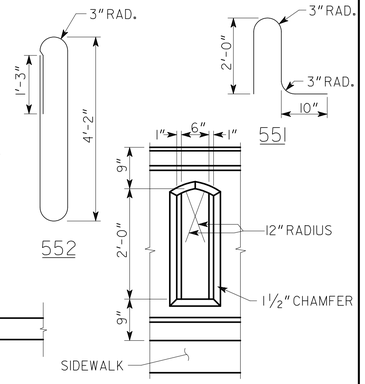


WINDOW DETAIL
SCALE: ¾" = 1'-0"

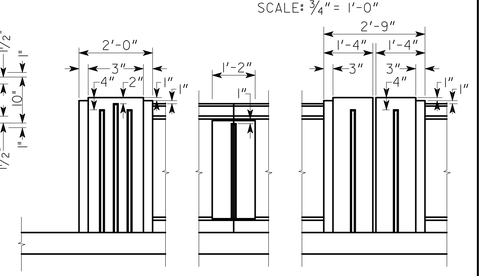


END SPAN INTERMEDIATE
EXTERIOR PILASTER ELEVATION

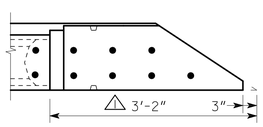


PLAN
PARAPET SECTION 4C △ MODIFICATION DETAIL
SCALE: ¾" = 1'-0"

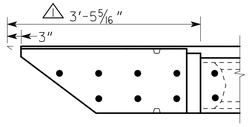


PLAN
PARAPET SECTION 5 MODIFICATION DETAIL
SCALE: ¾" = 1'-0"

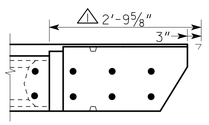


PLAN
PARAPET SECTION 7 MODIFICATION DETAIL
SCALE: ¾" = 1'-0"

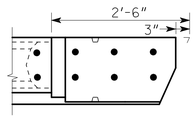


PLAN
PARAPET SECTION 15 MODIFICATION DETAIL
SCALE: ¾" = 1'-0"

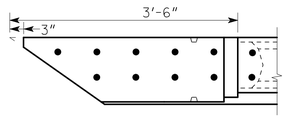


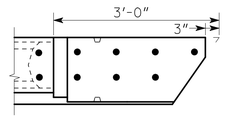


PLAN
PARAPET SECTION 16 MODIFICATION DETAIL
SCALE: ¾" = 1'-0"

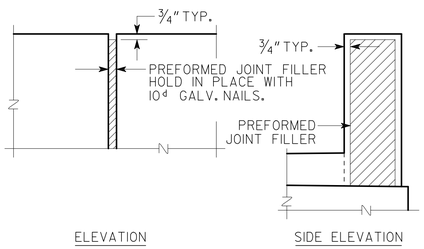


DETAIL OF EXPANSION JOINT IN PARAPET
NO SCALE

NOTE: WIDTH OF EXP. JT. IN PARAPET AT EXP. JT. IN DECK SHALL MATCH THE WIDTH OF THE EXP. JT. IN DECK. ALL OTHER EXP. JTS. IN PARAPET SHALL BE 1" WIDE.

USE ON CONSTRUCTION

** CONSTRUCTION JOINT - STRIKE OFF LEVEL AND LEAVE ROUGH.

* 4'-10" MIN. LAP 750 BARS, TYP.
2'-2" MIN. LAP 550 BARS, TYP.
1'-9" MIN. LAP 400 BARS, TYP.

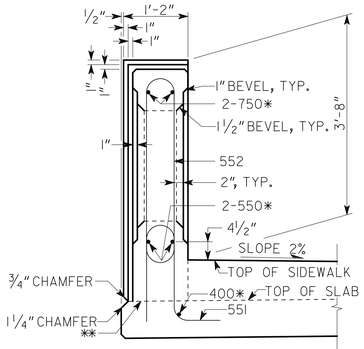


SECTION THRU POST
(SHOWING PILASTER)
SCALE: ¾" = 1'-0"

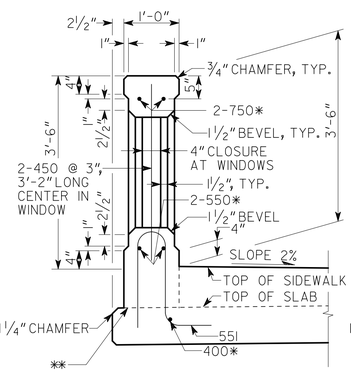


SECTION THRU CLOSED WINDOW
SCALE: ¾" = 1'-0"

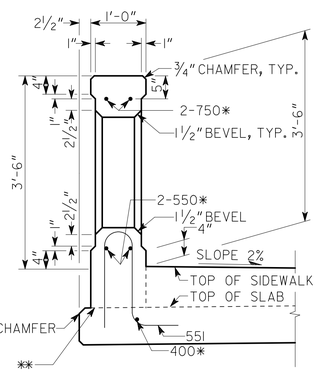


SECTION THRU OPEN WINDOW
SCALE: ¾" = 1'-0"

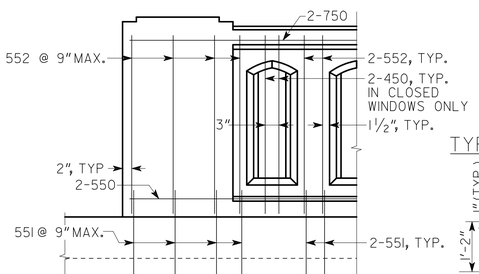


TYPICAL REINFORCEMENT PLACEMENT
SCALE: ¾" = 1'-0"

NOTE:
GENERAL CONCRETE PARAPET DETAILS SHOWN. NOT ALL DETAILS APPLY TO THIS BRIDGE. FENCE NOT SHOWN.

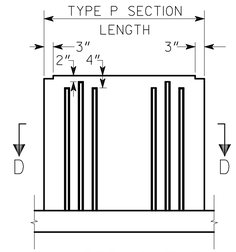


TYPICAL INTERIOR ELEVATION OF TYPE P SECTION
SCALE: ½" = 1'-0"

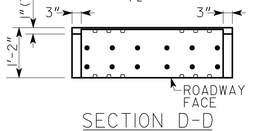


SECTION D-D
SCALE: ½" = 1'-0"

BRIDGE NO. 1


Heath & Lineback Engineers
INCORPORATED
2390 CANTON ROAD, BUILDING 200
MARIETTA, GEORGIA 30066-5393
(770)424-1668


GEORGIA
DEPARTMENT OF TRANSPORTATION
ENGINEERING DIVISION-OFFICE OF BRIDGES AND STRUCTURES

CONCRETE PARAPET DETAILS
SPRING STREET VIADUCT OVER
CSX TRANSPORTATION

FULTON COUNTY
BHNLB-9073-00(016)
BRNLB-9073-00(018)

| REVISIONS | BY | DATE |
|---|---|---|
| CNN PLAZA & RAMP TIE-IN | KAK | 10-03-14 |

DRAWING NO. 35 - 031
BRIDGE SHEET 31 OF 79

SCALE: ½" = 1'-0" JULY 2013

| | | | | | |
|---|---|---|---|---|---|
| DESIGNED | KAK | CHECKED | BKA/GBL | REVIEWED | WMD/DLC |
| DRAWN | JRL | DESIGN GROUP | SWW | APPROVED | BFR |

1 INCH WHEN PRINTED FULL SIZE

JN 201044 \ BRIDGE \ BRIDGE 1 \ SSI CPD.DGN