STATE	PROJECT NUMBER	SHEET NO.	TOTAL SHEETS
GA.	BHNLB-9073-00(016) BRNLB-9073-00(018)	143	444

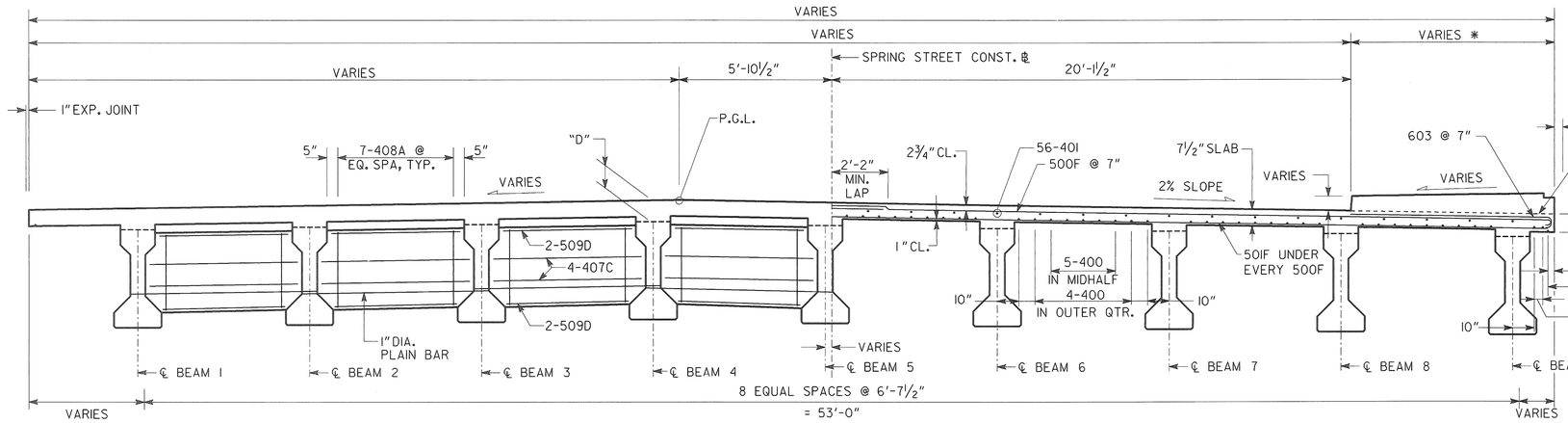

HALF SECTION AT DIAPHRAGM
LOOKING UPSTATION

HALF SECTION THRU SLAB
LOOKING UPSTATION

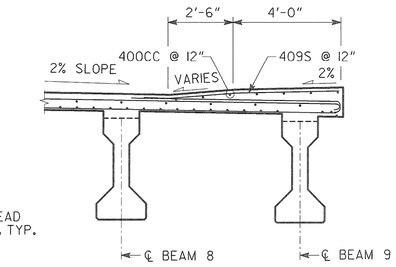

PARTIAL SECTION AT GA BAR ENTRANCE
STA. 27+00 TO 27+30, RIGHT

NOTES:

1. MAINTAIN 2" CLEARANCE ON ALL REINFORCEMENT UNLESS OTHERWISE NOTED.
2. * SEE DECK PLAN FOR LIMITS OF SIDEWALK AND PARAPET.
3. SPACING OF 500 AND 501 BARS IS ALONG LEFT EDGE OF BRIDGE.
4. BARS 405 ARE PLACED PARALLEL TO BEAM.

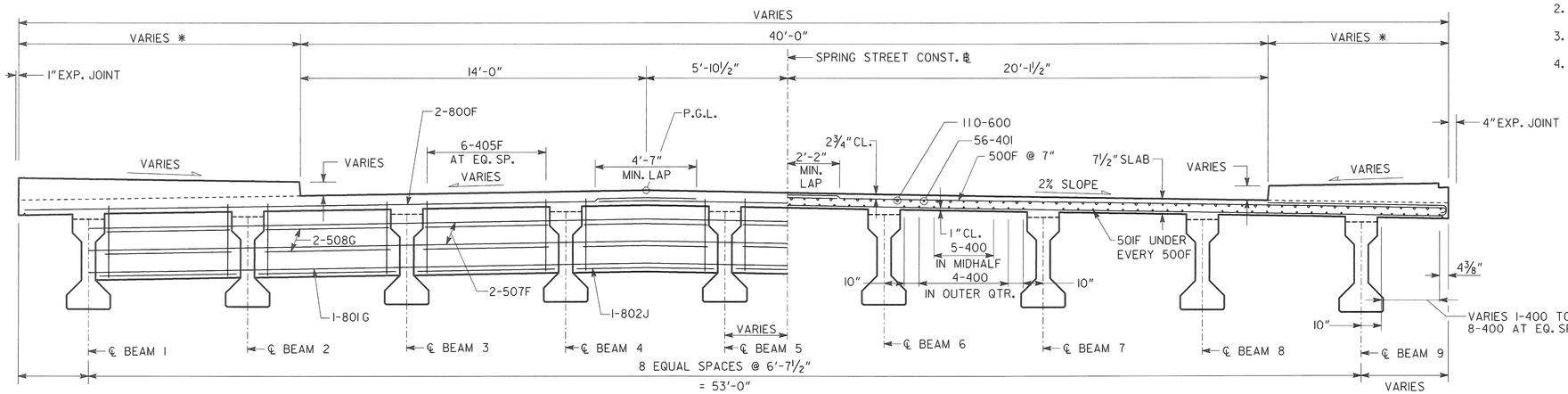

HALF SECTION AT EDGE BEAM
LOOKING UPSTATION

HALF SECTION THRU SLAB AT PIER
LOOKING UPSTATION

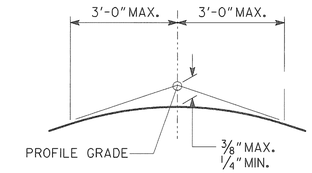

CROWN DETAIL
TRANSITION TO CROWN WITHIN 3' OF P.G.L.

DIMENSION "D" IS MEASURED FROM TOP OF SLAB TO TOP OF BEAMS AT CENTERLINE OF BEARING. VARY "D" BETWEEN BEARINGS TO COMPENSATE FOR DEAD LOAD DEFLECTION. MAINTAIN A CONSTANT SLAB THICKNESS OF 7½" BETWEEN BEAMS AND 8½" AT THE OVERHANGS.

"D" = 1 1¼" (BMS. 2 - 8)
1'-0¼" (BMS. 1 & 9)

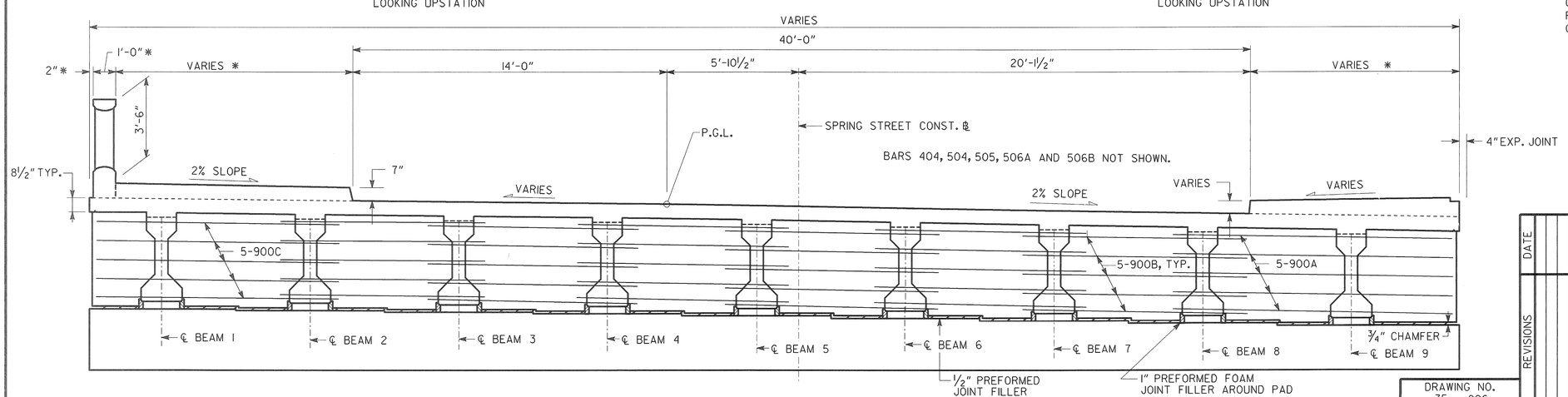

FULL SECTION THRU ENDWALL
LOOKING UPSTATION

BRIDGE NO. 1

Heath & Lineback Engineers
INCORPORATED
2390 CANTON ROAD, BUILDING 200
MARIETTA, GEORGIA 30066-5393
(770)424-1668

GEORGIA
DEPARTMENT OF TRANSPORTATION
ENGINEERING DIVISION-OFFICE OF BRIDGES AND STRUCTURES

DECK SECTION
SPAN 19
SPRING STREET VIADUCT OVER
CSX TRANSPORTATION

FULTON COUNTY
BHNLB-9073-00(016)
BRNLB-9073-00(018)

SCALE: ⅜" = 1'-0"
JULY 2013

DATE	REVISIONS	BY

DRAWING NO. 35 - 026
BRIDGE SHEET 26 OF 79

DESIGNED	KAK	CHECKED	RLF/GBL	REVIEWED	WMD/DLC
DRAWN	JRL	DESIGN GROUP	SWW	APPROVED	BFR

1 INCH WHEN PRINTED FULL SIZE

J:\ 2011 044 \ BRIDGE \ BRIDGE 1 \ SSI DS9.DGN