VOID

STATE	PROJECT NUMBER	SHEET NO.	TOTAL SHEETS
GA.	BHNLB-9073-00(016) BRNLB-9073-00(018)	139	444

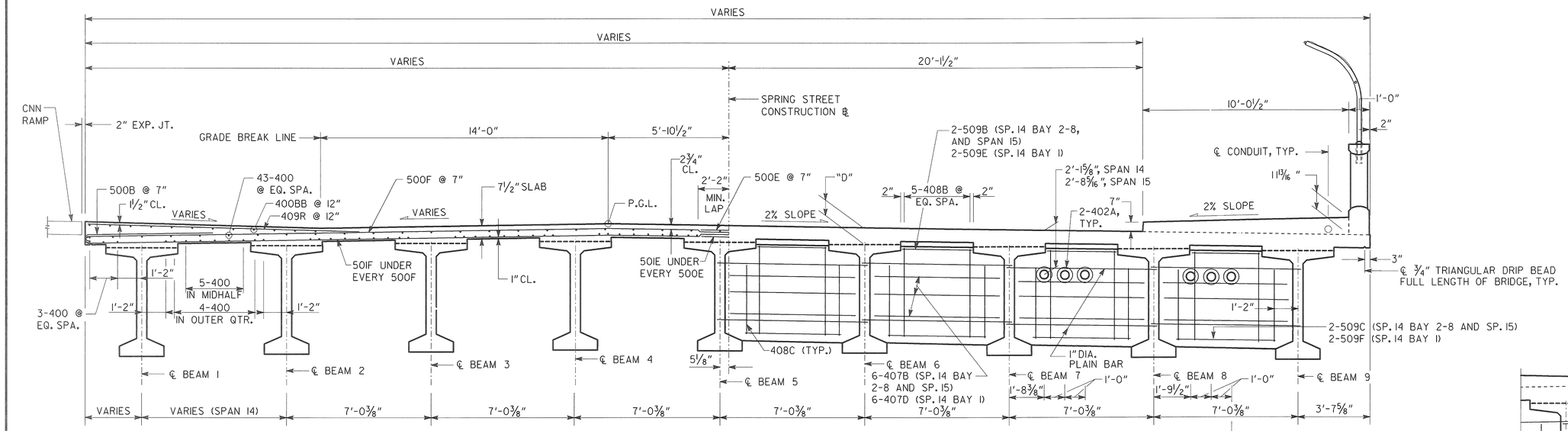

HALF SECTION THRU SLAB
AT CNN RAMP
LOOKING UPSTATION

HALF SECTION THRU DIAPHRAGM
LOOKING UPSTATION

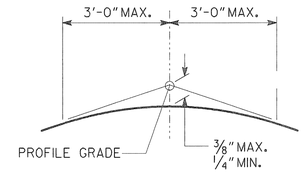

CROWN DETAIL
TRANSITION TO CROWN WITHIN 3' OF P.G.L.

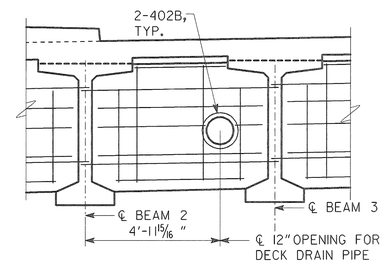

DECK DRAIN OPENING IN DIAPHRAGM
DETAIL OF OPENING IN PIER 14 EDGE BEAM SIMILAR

DIMENSION "D" IS MEASURED FROM TOP OF SLAB TO TOP OF BEAMS AT CENTERLINE OF BEARING. VARY "D" BETWEEN BEARINGS TO COMPENSATE FOR DEAD LOAD DEFLECTION AND VERTICAL CURVE. MAINTAIN A CONSTANT SLAB THICKNESS OF 7½" BETWEEN THE BEAMS AND 9⅝" AT THE OVERHANGS.

"D" = 9½" (SPAN 15, BMS. 2-8)
"D" = 11⅝" (SPAN 15 BMS. 1 & 9)

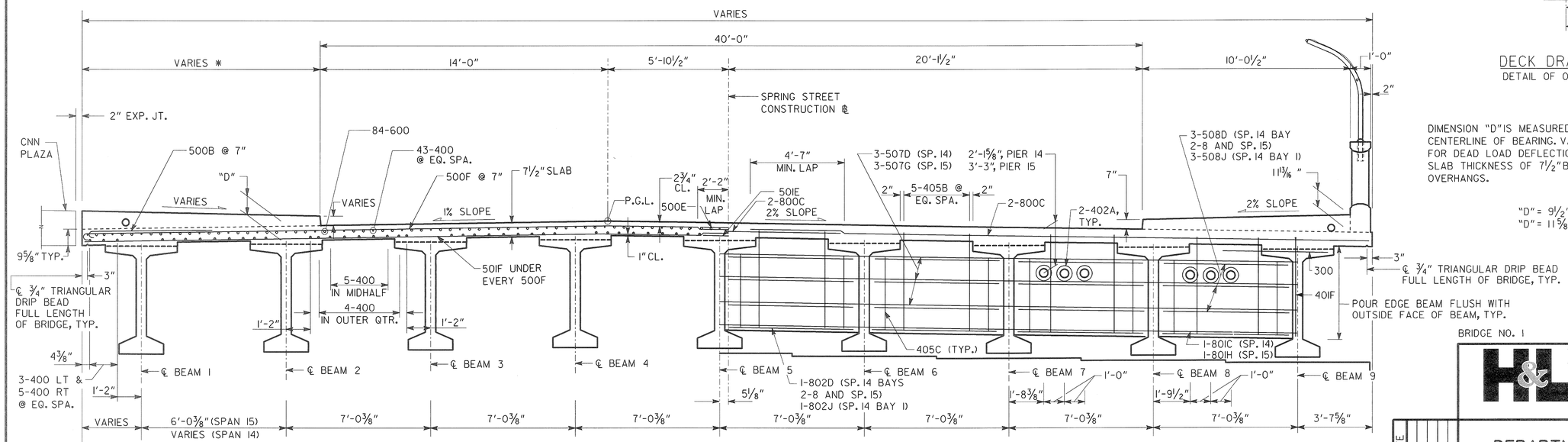

HALF SECTION THRU SLAB AT PIER
(PIER 14)
LOOKING UPSTATION

HALF SECTION AT EDGE BEAM
(PIERS 14 & 15)
LOOKING UPSTATION

NOTES:

1. MAINTAIN 2" CLEARANCE ON ALL REINFORCEMENT UNLESS OTHERWISE NOTED.
2. * SEE DECK PLAN FOR LIMITS OF SIDEWALK AND PARAPET
3. BARS 405 ARE PLACED PARALLEL TO BEAM.
4. ADJUST REINFORCING AS NEEDED TO CLEAR UTILITY OPENINGS.

BRIDGE NO. 1

Heath & Lineback Engineers
INCORPORATED
2390 CANTON ROAD, BUILDING 200
MARIETTA, GEORGIA 30066-5393
(770)424-1668

GEORGIA
DEPARTMENT OF TRANSPORTATION
ENGINEERING DIVISION-OFFICE OF BRIDGES AND STRUCTURES

DECK SECTION
SPANS 14 & 15
SPRING STREET VIADUCT OVER
CSX TRANSPORTATION

FULTON COUNTY — BHNLB-9073-00(016) BRNLB-9073-00(018)

SCALE: ⅜" = 1'-0" — JULY 2013

DRAWING NO.	REVISIONS	BY	DATE
35 - 022			
BRIDGE SHEET 22 OF 79			

DESIGNED	KAK	CHECKED	RLF/GBL	REVIEWED	WMD/DLC
DRAWN	JRL	DESIGN GROUP	SWW	APPROVED	BFR

1 INCH WHEN PRINTED FULL SIZE

JX 2011 044 \ BRIDGE \ BRIDGE 1 \ SSI D55.DGN