STATE	PROJECT NUMBER	SHEET NO.	TOTAL SHEETS
GA.	BHNLB-9073-00(016) BRNLB-9073-00(018)	136	444

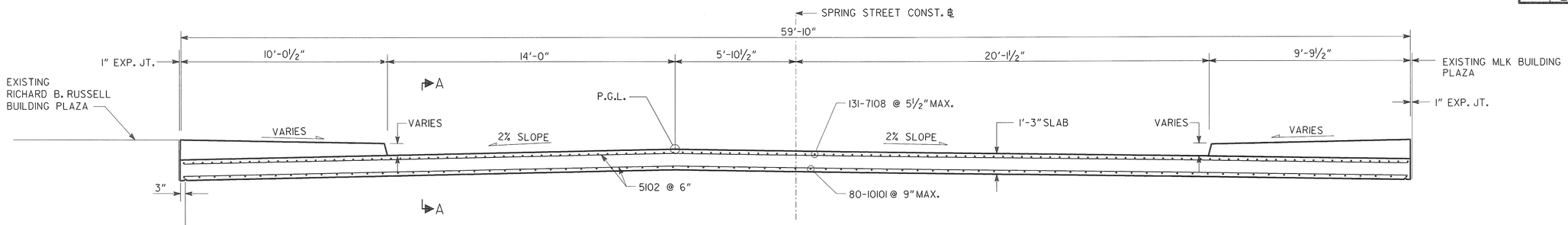

SECTION THRU SLAB - SPAN 1

LOOKING UPSTATION

DIMENSION "D" IS MEASURED FROM TOP OF SLAB TO TOP OF BEAMS AT CENTERLINE OF BEARING. VARY "D" BETWEEN BEARINGS TO COMPENSATE FOR DEAD LOAD DEFLECTION AND VERTICAL CURVE. MAINTAIN A CONSTANT SLAB THICKNESS OF 7⅝" BETWEEN THE BEAMS AND 8⅝" OR 9⅝" AT THE OVERHANGS.

"D" = 9⅛" (SPAN 2, BMS. 2-8)
10⅛" (SPAN 2, BMS. 1&9)
9⅝" (SPAN 3, BMS. 2-8)
10⅝" (SPAN 3, BMS. 1&9)
9⅜" (SPAN 4, BMS. 2-8)
10⅜" (SPAN 4, BMS. 1&9)
9⅝" (SPAN 5, BMS. 2-8)
11⅝" (SPAN 5, BMS. 1&9)

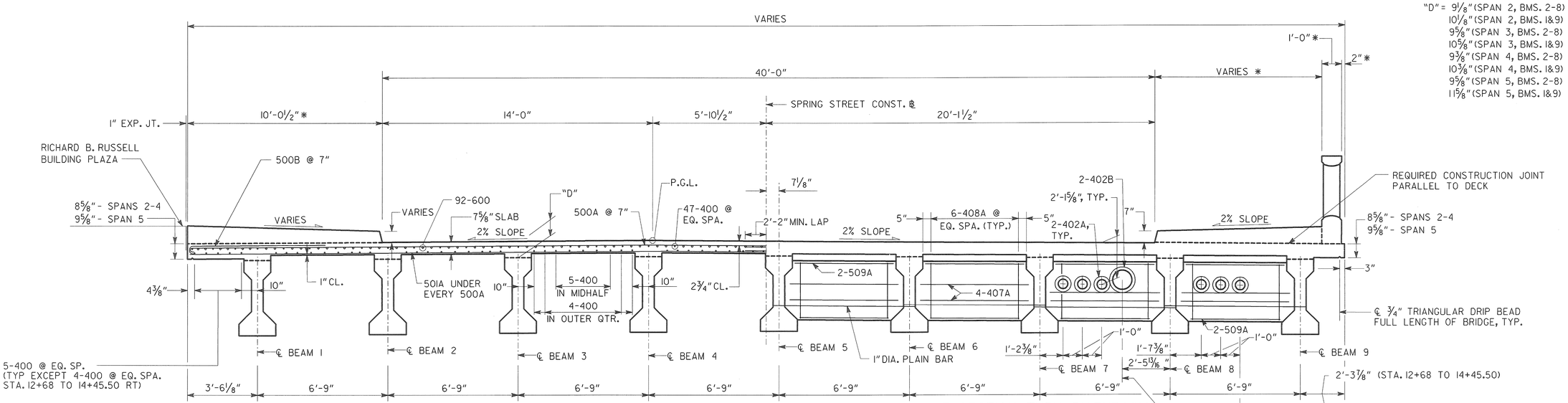

HALF SECTION THRU SLAB AT PIER

(PIERS 2 THRU 4)

LOOKING UPSTATION

HALF SECTION THRU DIAPHRAGM

(SPAN 5 SHOWN, SPANS 2-4 SIMILAR)

LOOKING UPSTATION

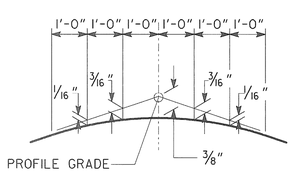

CROWN DETAIL

2% CROSS SLOPE

NOTES:

1. MAINTAIN 2" CLEARANCE ON ALL REINFORCEMENT UNLESS OTHERWISE NOTED.
2. * SEE DECK PLAN FOR LIMITS OF SIDEWALK AND PARAPET
3. ADJUST REINFORCING AS NEEDED TO CLEAR UTILITY OPENINGS.

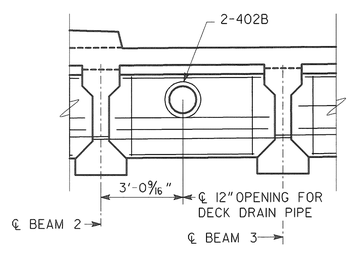

DECK DRAIN OPENING IN DIAPHRAGM

SPAN 4 ONLY

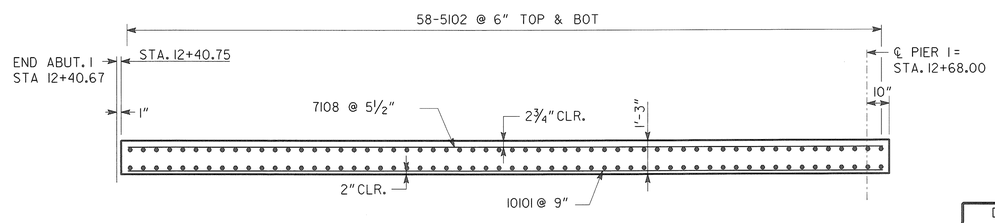

SECTION A-A

BRIDGE NO. 1

Heath & Lineback Engineers
INCORPORATED
2390 CANTON ROAD, BUILDING 200
MARIETTA, GEORGIA 30066-5393
(770)424-1668

GEORGIA
DEPARTMENT OF TRANSPORTATION
ENGINEERING DIVISION-OFFICE OF BRIDGES AND STRUCTURES

DECK SECTION - SPANS 1 THRU 5
SPRING STREET VIADUCT OVER
CSX TRANSPORTATION

FULTON COUNTY
BHNLB-9073-00(016)
BRNLB-9073-00(018)

SCALE: ⅜" = 1'-0"
JULY 2013

DATE	REVISIONS	BY

DRAWING NO. 35 - 019
BRIDGE SHEET 19 OF 79

DESIGNED	KAK	CHECKED	RLF/GBL	REVIEWED	WMD/DLC
DRAWN	JRL	DESIGN GROUP	SWW	APPROVED	BFR

1 INCH WHEN PRINTED FULL SIZE

JX 2011044 \ BRIDGE \ BRIDGE 1 \ SS1 DS2.DGN