STATE	PROJECT NUMBER	SHEET NO.	TOTAL SHEETS
GA.	BHNLB-9073-00(016) BRNLB-9073-00(018)	120	444

JACKING NOTES:
1. SURVEY THE DECK PRIOR TO JACKING. AFTER JACKING IS COMPLETE, EPOXY INJECT ANY CRACKS THAT HAVE FORMED.

JACKING PROCEDURE:

PIER 10:
1. RAISE BRIDGE
2. INSERT NEW SMOOTH DOWEL BAR EXTENSION INTO BEAM
3. WELD DOWEL BAR EXTENSION TO EXISTING DOWEL BAR
4. RAISE BEARING ASSEMBLY AND SECURE TO BEAM
5. PLACE REBAR AND FORM AND POUR PEDESTAL
6. LOWER BRIDGE

PIERS 11 & 12:
1. RAISE BRIDGE
2. RAISE BEARING ASSEMBLY AND SECURE TO BEAM
3. CUT OFF EXISTING DOWEL FLUSH WITH EXISTING CONCRETE
4. INSERT NEW SMOOTH DOWEL BAR
5. PLACE REBAR AND FORM AND POUR PEDESTAL
6. LOWER BRIDGE

PIER 13:
1. RAISE BRIDGE
2. CUT OFF EXISTING SMOOTH DOWEL BAR 1" ABOVE SHIM PLATE
3. INSERT NEW DOWEL BAR EXTENSION IN 2 SECTIONS (IF REQUIRED)
4. WELD SECTIONS TOGETHER AND WELD TO EXISTING DOWEL BAR
5. RAISE BEARING ASSEMBLY AND SECURE TO BEAM
6. PLACE REBAR AND FORM AND POUR PEDESTAL
7. LOWER BRIDGE

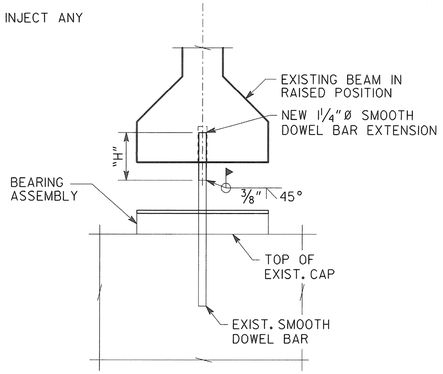

SMOOTH DOWEL BAR EXTENSION
(PIER 10 SHOWN, PIER 13 SIMILAR)

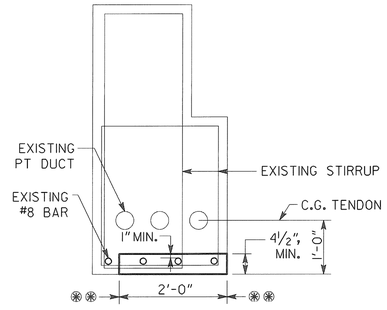

PIER 11 SPALL REPAIR

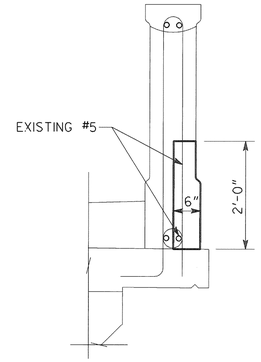

PARAPET SPALL REPAIR
ABOVE PIER 12, RIGHT SIDE

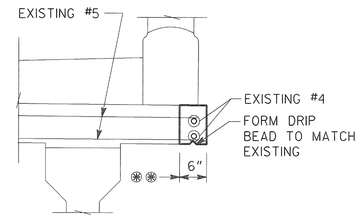

OVERHANG SPALL REPAIR
ABOVE PIER 12, RIGHT SIDE

SPALL REPAIR NOTES:

1. CONCRETE REMOVAL SHALL BE INCLUDED IN THE PRICE BID FOR PAY ITEM 540-1202, REMOVAL OF PARTS OF EXISTING BRIDGE. LENGTH OF REMOVAL IS 4'-0" AT PIER 11 AND 2'-0" AT OVERHANG AND PARAPET AT PIER 12.

2. ❋❋ REQUIRED VERTICAL SAW CUT. EXERCISE EXTREME CARE NOT TO SAW OR DAMAGE THE REINFORCING STEEL OR POST TENSIONING DUCTS. ANY DAMAGED REINFORCING OR POST TENSIONING SHALL BE REPLACED BY THE CONTRACTOR AT NO ADDITIONAL COST TO THE DEPARTMENT.

3. SPALLED AREA SHALL BE SAW CUT AND SQUARED UP ALL AROUND TO A DEPTH OF AT LEAST 1" BEYOND THE REINFORCING STEEL. AREA OF CONCRETE TO BE REMOVED SHALL BE AS SPECIFIED IN SPECIAL PROVISION 521.

4. CLEAN ALL EXPOSED REINFORCING STEEL OF ALL RUST AND CORROSIVE PRODUCTS INCLUDING OIL, DIRT, CONCRETE, FRAGMENTS, LOOSE SCALE AND ANY OTHER COATING OF ANY CHARACTER THAT WOULD DESTROY OR INHIBIT THE BOND WITH THE PATCHING MATERIAL.

PEDESTAL QUANTITY TABLE				
	PIER 10	PIER 11	PIER 12	PIER 13
CY CLASS AA-1 CONCRETE	4.4	7.0	7.2	3.4
LB BAR REINF STEEL	468	601	601	415

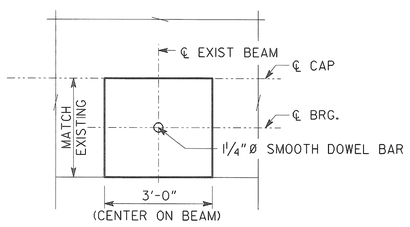

PLAN

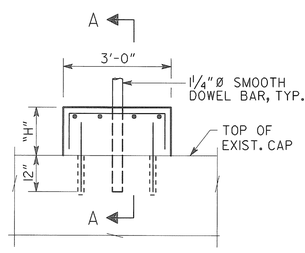

ELEVATION

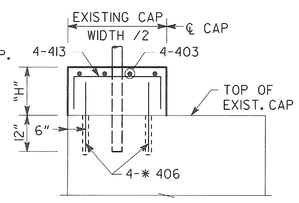

SECTION A-A

NOTES:
1. MAINTAIN A MINIMUM 2" CLEAR TO ALL REINFORCEMENT UNLESS NOTED OTHERWISE.

2. * BARS SHALL BE ANCHORED WITH TYPE VIII EPOXY ADHESIVE (12" MIN. EMBED.). COST SHALL BE INCLUDED IN THE PRICE BID FOR PAY ITEM 511-1000.

PEDESTAL DETAIL
(PIERS 10 AND 13 SHOWN, AT PIERS 11 AND 12 PROVIDE 12" MINIMUM EMBEDMENT OF DOWEL BAR)

PIER	BEAM	"H"
10 BK	1 - 10	9½"
10 AHD	1 - 10	9½"
11 BK	1 - 4	1'-3⅛"
	5 - 10	1'-3"
11 AHD	1 - 10	1'-3⅛"
12 BK	1 - 8	1'-3¾"
	9 - 10	1'-3⅝"
12 AHD	1	1'-2⅞"
	2	1'-3"
	3	1'-3⅛"
	4	1'-3¼"
	5	1'-3½"
	6	1'-3⅝"
	7	1'-3¾"
	8	1'-3⅞"
	9	1'-4"
	10	1'-4⅛"
13 BK	1-10	7"
13 AHD	1-10	7"

NOTE:
ADJUST "H" PER FIELD SURVEY TO ACHIEVE POST-JACKING ELEVATIONS SHOWN ON PLAN AND ELEVATION.

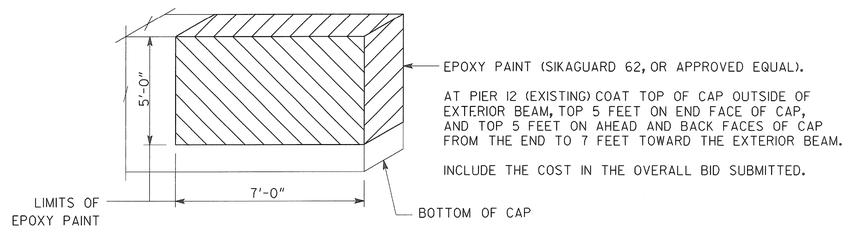

CAP EPOXY PAINT DETAIL
PIER 12

PIER	LOCATION	LENGTH
12 (EXISTING, STA. 19+71 ±)	CAP	84"

LOCATIONS REQUIRING EPOXY INJECTION

BRIDGE NO. 1

Heath & Lineback Engineers
INCORPORATED
2390 CANTON ROAD, BUILDING 200
MARIETTA, GEORGIA 30066-5393
(770)424-1668

GEORGIA
DEPARTMENT OF TRANSPORTATION
ENGINEERING DIVISION-OFFICE OF BRIDGES AND STRUCTURES

JACKING AND REPAIR DETAILS
SPRING STREET VIADUCT OVER
CSX TRANSPORTATION

FULTON COUNTY
BHNLB-9073-00(016)
BRNLB-9073-00(018)

NO SCALE
JULY 2013

DRAWING NO. 35 - 04A
BRIDGE SHEET 4A OF 79

REVISIONS | DATE | BY

DESIGNED KAK | CHECKED RLF/GBL | REVIEWED WMD/DLC
DRAWN JRL | DESIGN GROUP SWW | APPROVED BFR

1 INCH WHEN PRINTED FULL SIZE

JX 2011024 \ BRIDGE \ BRIDGE 1 \ 04ASSI SDI.DGN