STATE	PROJECT NUMBER	SHEET NO.	TOTAL SHEETS
GA.		360	444

APPROXIMATE WEIGHT OF FRAME & COVER 480 POUNDS

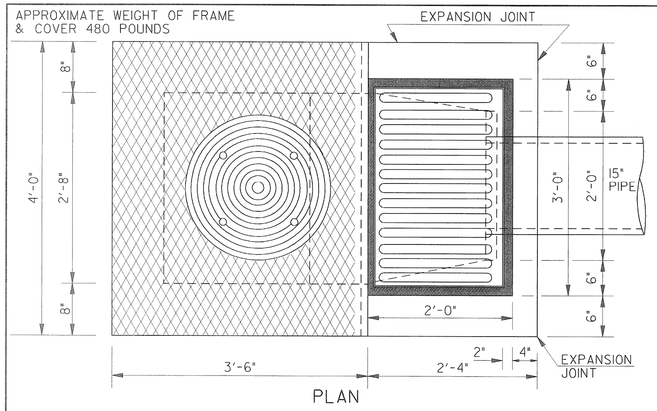

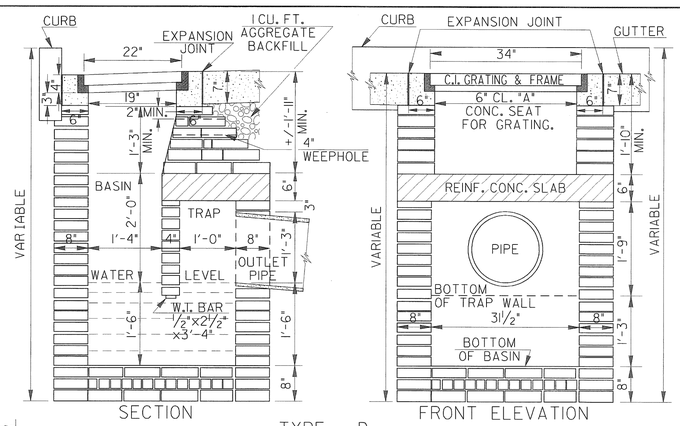

TYPE - D
TRAPPED BRICK INLET WITH GRATE
SECTION OF FRAME AND COVER

NOTE:
ALL CASTINGS SHALL CONFORM TO THE REQUIREMENTS OF THE STANDARD SPECIFICATIONS.

WEIGHTS
FRAME ESTIMATED 180 Lbs.
GRATING ESTIMATED 265 Lbs.
TOTAL 445 Lbs.

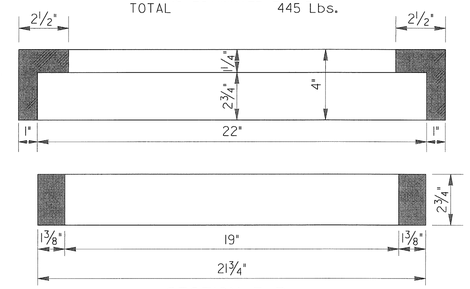

NOTE:
CASTINGS ARE CITY OF ATLANTA STD. AND MODIFICATION AS SHOWN FOR SECTION OF FRAME AND COVER.

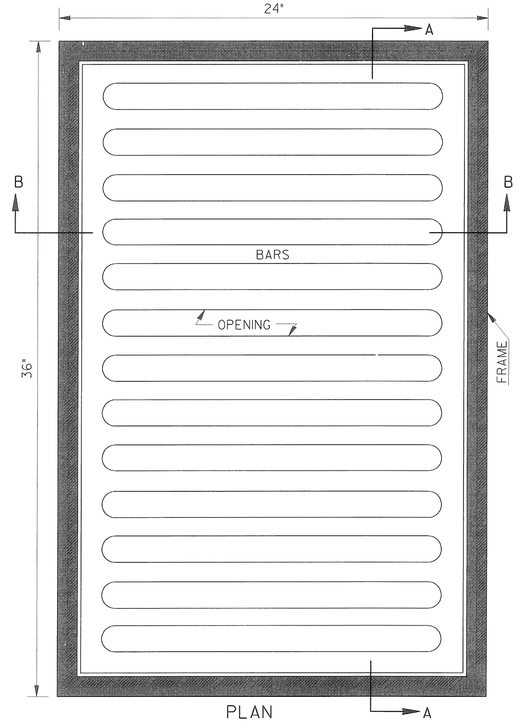

STORM WATER GRATING

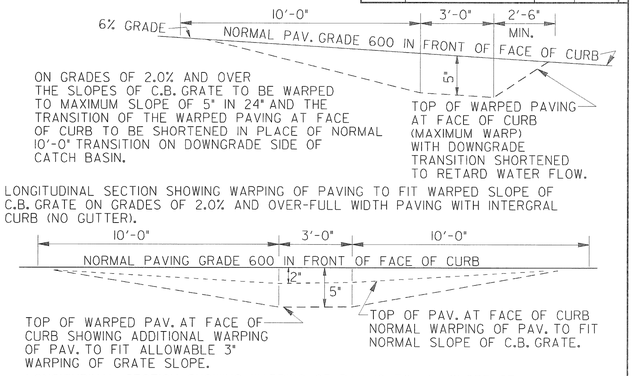

ON GRADES OF 2.0% AND OVER THE SLOPES OF C.B. GRATE TO BE WARPED TO MAXIMUM SLOPE OF 5" IN 24" AND THE TRANSITION OF THE WARPED PAVING AT FACE OF CURB TO BE SHORTENED IN PLACE OF NORMAL 10'-0" TRANSITION ON DOWNGRADE SIDE OF CATCH BASIN.

LONGITUDINAL SECTION SHOWING WARPING OF PAVING TO FIT WARPED SLOPE OF C.B. GRATE ON GRADES OF 2.0% AND OVER-FULL WIDTH PAVING WITH INTERGRAL CURB (NO GUTTER).

LONGITUDINAL SECTION SHOWING WARPING OF PAVING TO FIT SLOPE OF GRATING WHERE PAVING IS FULL WIDTH WITH INTERGRAL CURB (AND NO GUTTER).

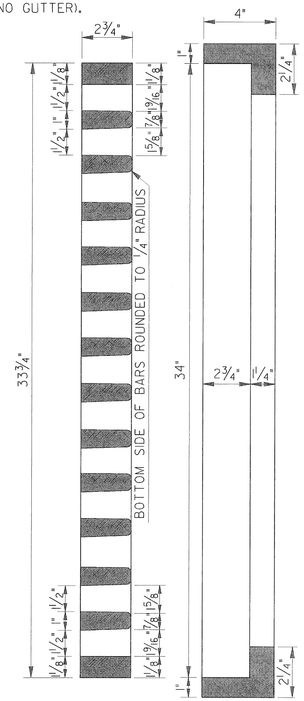

SECTION A-A
SCALE: HOR. 1"=3'-0"
VERT. 1"=1'-0"

NOTE:
WEEPHOLES MAY BE 4" DIA. ROUND OR 4" SQUARE AT THE OPTION OF THE CONTRACTOR. AGGREGATE FOR BACKFILL SHALL CONSIST OF A MIXTURE OF 50% SIZE 57, M-58, 357, OR 467 COARSE AGGREGATE AND 50% SIZE 10 SAND AND SHALL BE PLACED IMMEDIATELY PRIOR TO COMPACTING OF THE BASE MATERIAL.

NOTE:
OPENINGS IN GRATES SHALL BE PERPENDICULAR TO DIRECTION OF TRAFFIC FOR ALL STRUCTURES.

STD. 1019B GRATE MAY BE SUBSTITUTED FOR IMPROVED HYDRAULIC CAPACITY.

SPECIAL NOTE:
THIS STANDARD SHOULD BE USED ONLY IN SAGS OR LOW POINTS. SEE OTHER STANDARDS FOR MORE EFFICIENT DRAINAGE STRUCTURES ON GRADES.

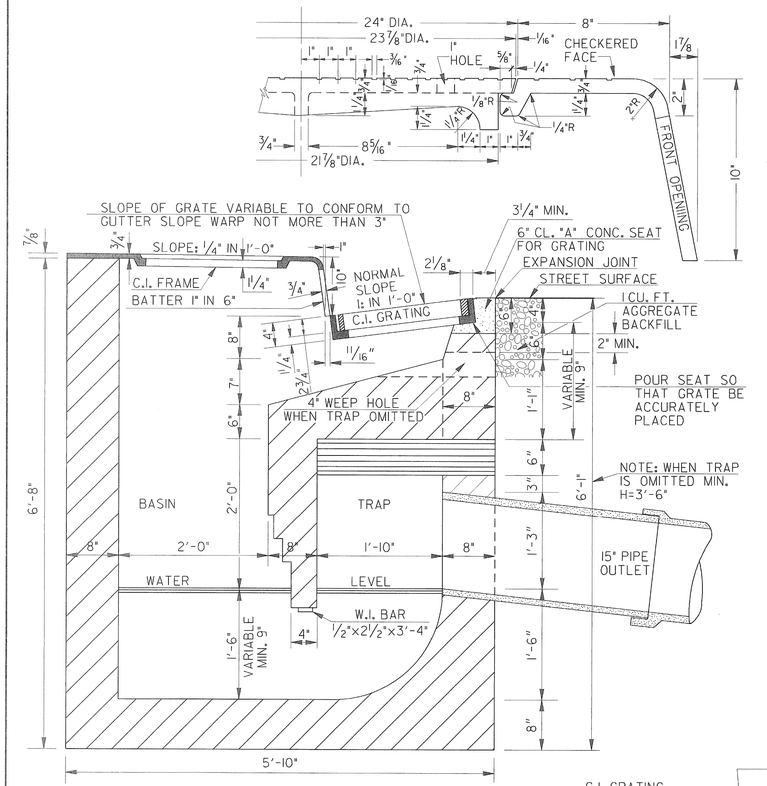

TYPE - A TRAPPED BRICK C.B. WITH HOOD
USE SMALL BRICK SIZE 8"x3 3/4"x2 1/8"

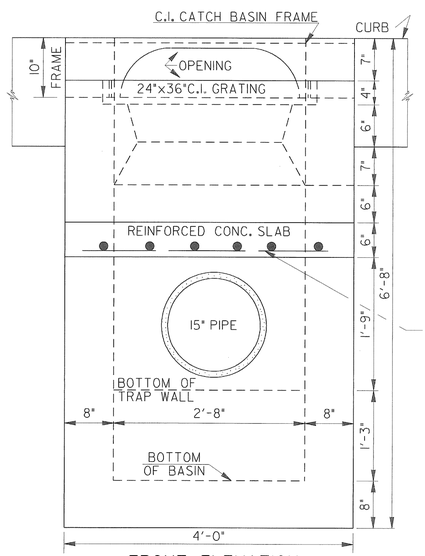

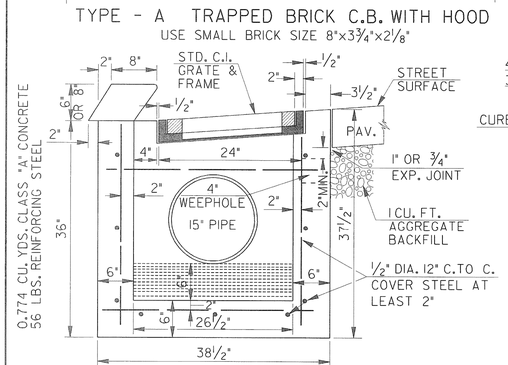

TYPE - B CONC. INLET BASIN

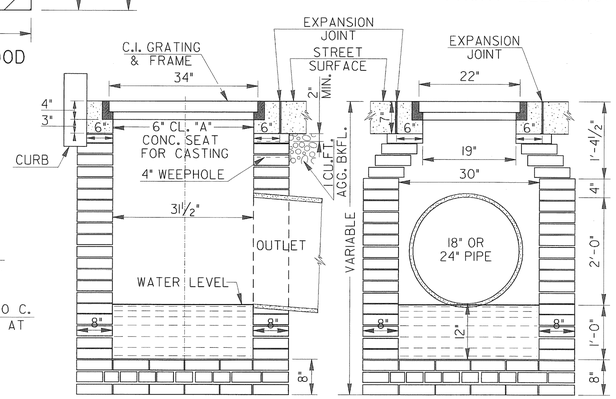

TYPE - C BRICK INLET BASIN

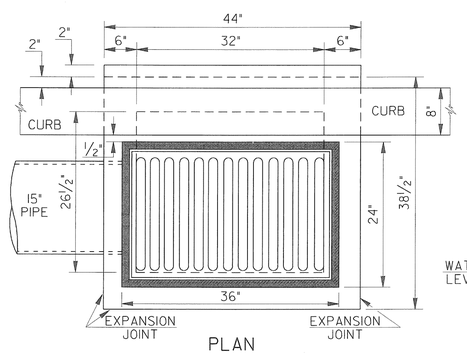

CONC. INLET BASIN

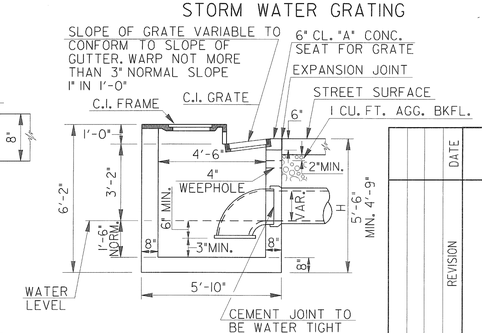

TYPE - A
TRAPPED BRICK C.B. WITH HOOD WITH TYPE E TRAP

GENERAL NOTE:
ALL TRAPS WILL BE OMITTED UNLESS SHOWN ON PLANS.

DATE	DEPARTMENT OF TRANSPORTATION STATE OF GEORGIA	
REVISION	STANDARD CATCH BASINS WITH CAST IRON GRATE INLETS REV. & REDR. SEPT. 1999	
BY	DES. ____ (SUBMITTED) STATE ROAD & AIRPORT DESIGN ENGINEER DRW. ____ TRA. ____ (APPROVED) CHIEF ENGINEER CHK. ____	NUMBER 1010