| STATE | PROJECT NUMBER | SHEET NO. | TOTAL SHEETS |
|---|---|---|---|
| GA. | BHNLB-9073-00(016)<br>BRNLB-9073-00(018) | 201 | 444 |

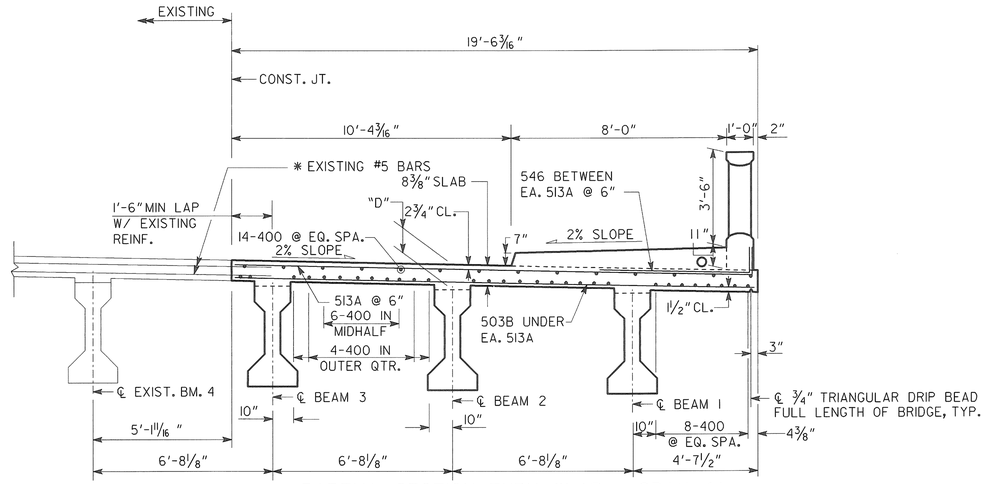


PARTIAL SECTION THRU SLAB - SPAN 4A

LOOKING AHEAD

DIMENSION "D" IS MEASURED FROM TOP OF SLAB TO TOP OF BEAMS AT CENTERLINE OF BEARING. VARY "D" BETWEEN BEARINGS TO COMPENSATE FOR DEAD LOAD DEFLECTION AND VERTICAL CURVE. MAINTAIN A CONSTANT SLAB THICKNESS OF 8 3/8".

"D" = 11" (SPAN 2A)
"D" = 10" (SPANS 3A AND 4A)

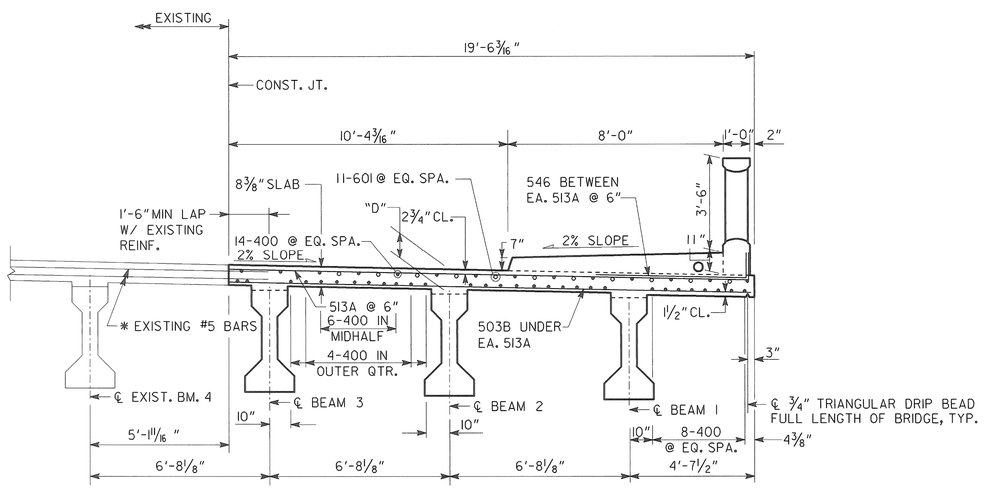


PARTIAL SECTION THRU SLAB AT PIER 4A AHD

LOOKING AHEAD

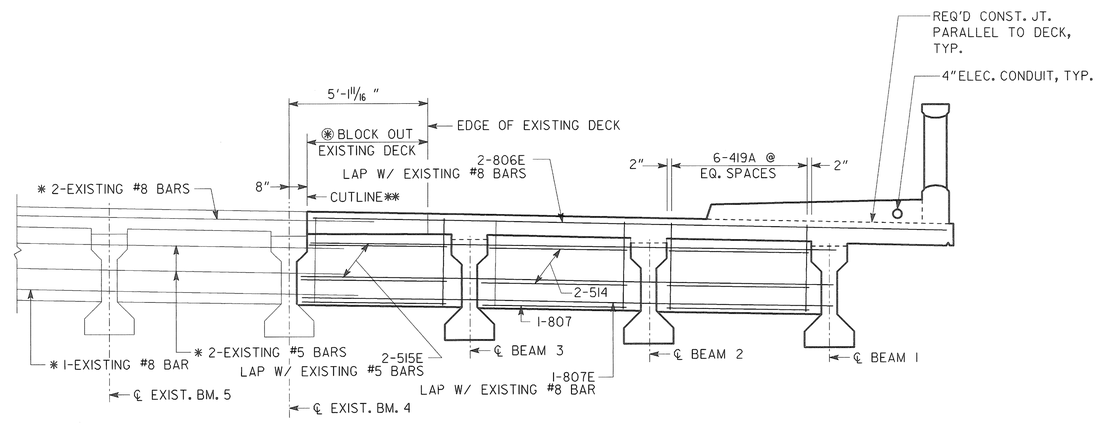


PARTIAL SECTION AT EDGE BEAM - SPAN 4A

LOOKING AHEAD

NOTES:

* 1. CONTRACTOR SHALL FIELD VERIFY ALL EXISTING REINFORCEMENT AND REPORT DISCREPANCIES TO THE ENGINEER.

⊛ 2. SEE EDGE BEAM CONSTRUCTION DETAIL ON DECK PLAN SHEET.

** 3. REQUIRED VERTICAL 1" SAW CUT.

BRIDGE NO. 2

Heath & Lineback Engineers
INCORPORATED
2390 CANTON ROAD, BUILDING 200
MARIETTA, GEORGIA 30066-5393
(770)424-1668

GEORGIA
DEPARTMENT OF TRANSPORTATION
ENGINEERING DIVISION-OFFICE OF BRIDGES AND STRUCTURES

DECK SECTIONS
MARTIN LUTHER KING JR. DRIVE

FULTON COUNTY

BHNLB-9073-00(016)
BRNLB-9073-00(018)

SCALE: 3/8" = 1'-0"

JULY 2013

| DRAWING NO. | BY | DATE | REVISIONS |
|---|---|---|---|
| 35 - 084 | | | |
| BRIDGE SHEET 5 OF 17 | | | |

| | | | | | |
|---|---|---|---|---|---|
| DESIGNED | KAK | CHECKED | RLF/MS | REVIEWED | WMD/DLC |
| DRAWN | JRL | DESIGN GROUP | SWW | APPROVED | BFR |

1 INCH WHEN PRINTED FULL SIZE

J:\2011044 \ BRIDGE \ BRIDGE 2 \ SS2 DS2.DGN