STATE	PROJECT NUMBER	SHEET NO.	TOTAL SHEETS
GA.	BHNLB-9073-00(016) BRNLB-9073-00(018)	139	444

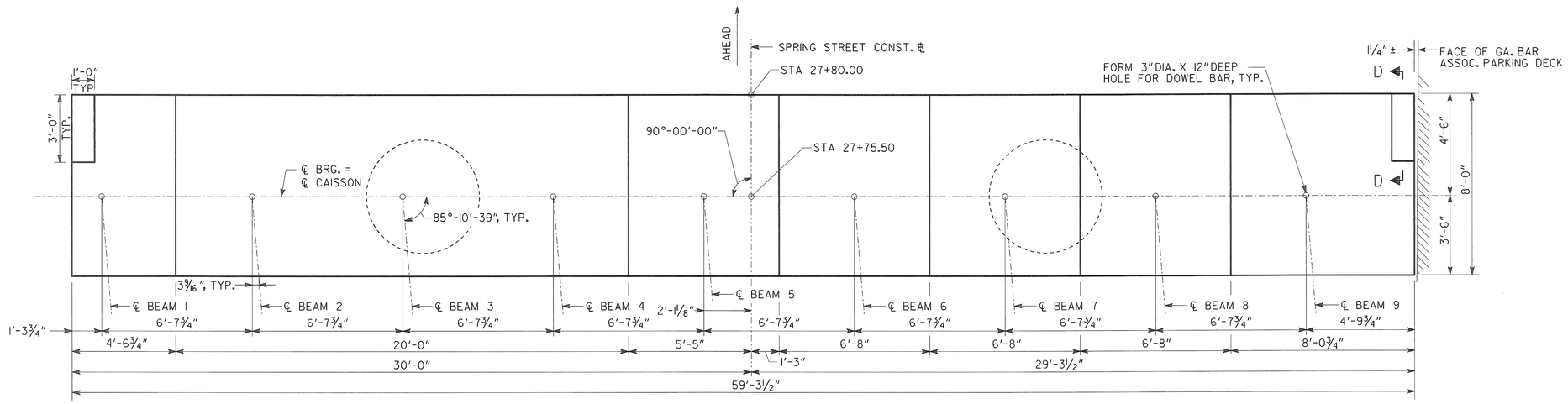

PLAN

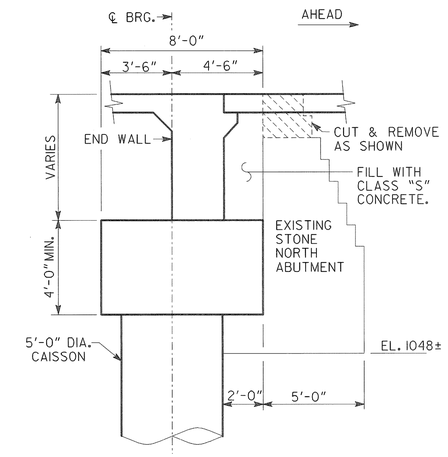

SECTION THRU ABUTMENT

NO SCALE

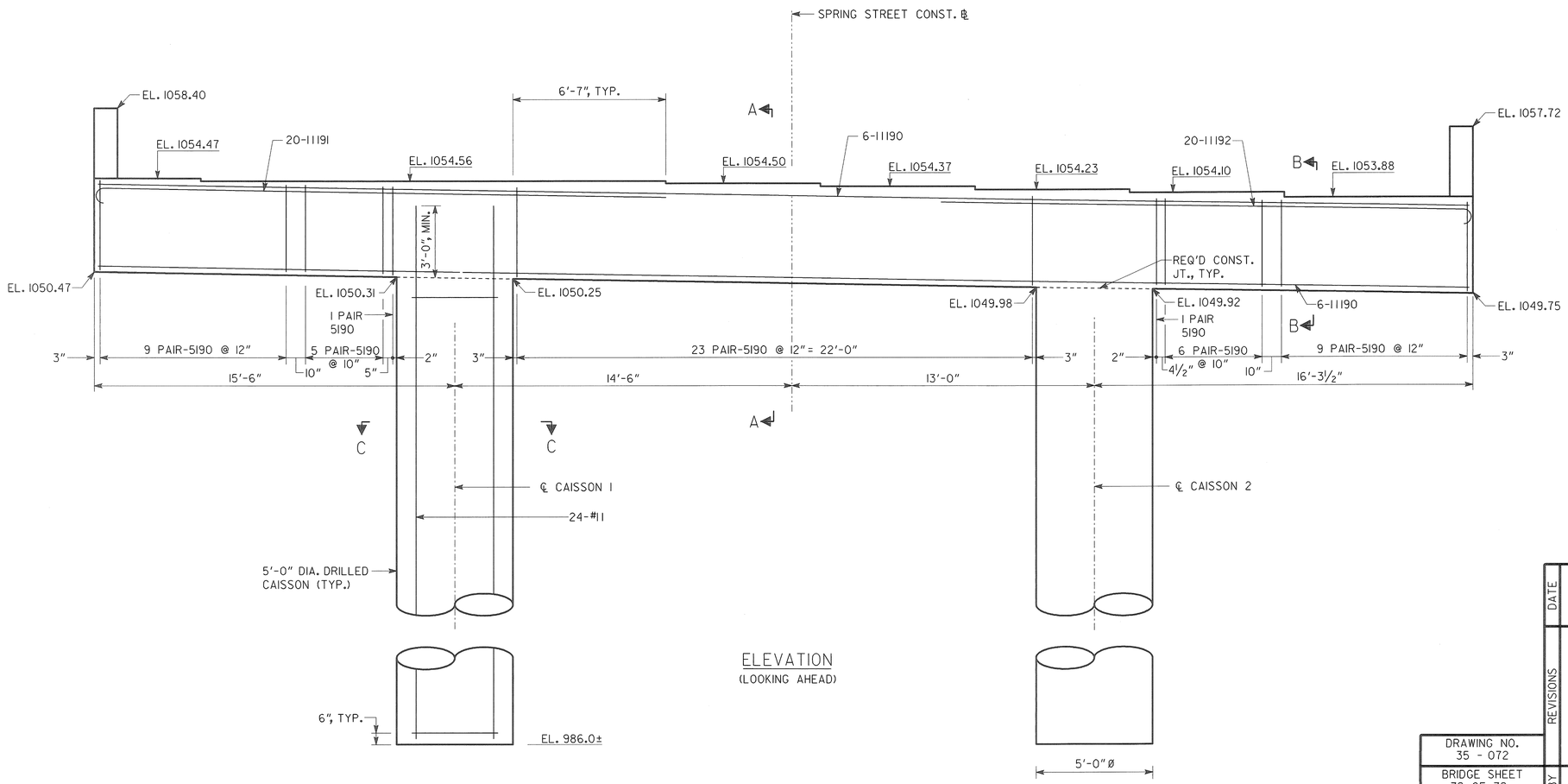

ELEVATION

(LOOKING AHEAD)

NOTES:
1. DRILLED CAISSONS ARE DESIGNED FOR A BEARING CAPACITY OF 100 KSF.
2. SOCKET CAISSONS A MINIMUM OF 5'-0" INTO SOUND ROCK.
3. MAINTAIN 2" CL. ON ALL REINFORCEMENT UNLESS NOTED OTHERWISE.
4. TEMPORARY CASING WILL BE REQUIRED TO INSTALL THE CAISSONS TO THE BEARING ELEVATIONS.
5. ALL CAISSONS SHALL BE DEWATERED TO ALLOW FOR THE INSPECTION OF THE BEARING SURFACE. A MINIMUM TEST HOLE OF 6 FEET WILL BE REQUIRED TO INSURE THERE ARE NO WEAK SEAMS UNDER THE SHAFT.

SUBSTRUCTURE QUANTITIES

ITEM	PIER 19
CY CLASS AA-1 CONCRETE	75.2
LB BAR REINF STEEL	11992

BRIDGE NO. 1

Heath & Lineback Engineers
INCORPORATED
2390 CANTON ROAD, BUILDING 200
MARIETTA, GEORGIA 30066-5393
(770)424-1668

GEORGIA
DEPARTMENT OF TRANSPORTATION
ENGINEERING DIVISION-OFFICE OF BRIDGES AND STRUCTURES

PIER 19 (N. ABUT.) DETAILS
SPRING STREET VIADUCT OVER
CSX TRANSPORTATION

FULTON COUNTY

BHNLB-9073-00(016)
BRNLB-9073-00(018)

SCALE: 3/8" = 1'-0"

JULY 2013

DATE	REVISIONS	BY

DRAWING NO. 35 - 072

BRIDGE SHEET 72 OF 79

DESIGNED	KAK	CHECKED	RLF/GBL	REVIEWED	WMD/DLC
DRAWN	JRL	DESIGN GROUP	SWW	APPROVED	BFR

1 INCH WHEN PRINTED FULL SIZE

J:\ 2011044 \ BRIDGE \ BRIDGE 1 \ SSI ABUTN.DGN