STATE	PROJECT NUMBER	SHEET NO.	TOTAL SHEETS
GA.	BHNLB-9073-00(016) BRNLB-9073-00(018)	133	444

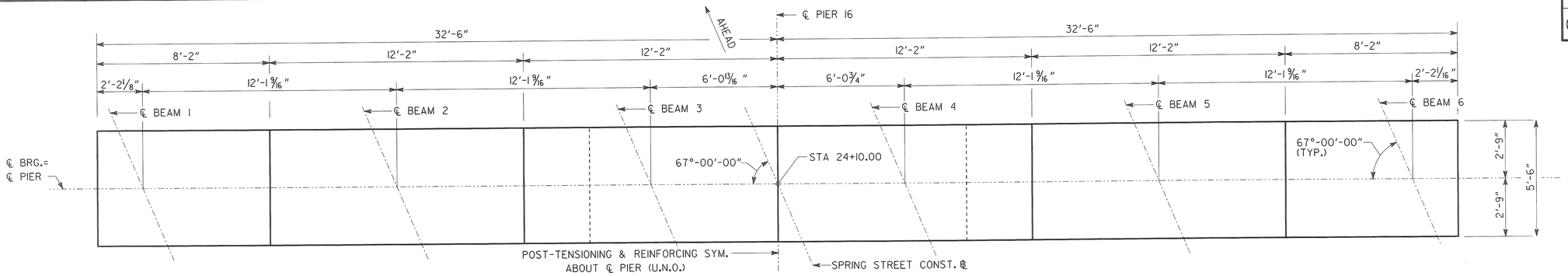

PLAN

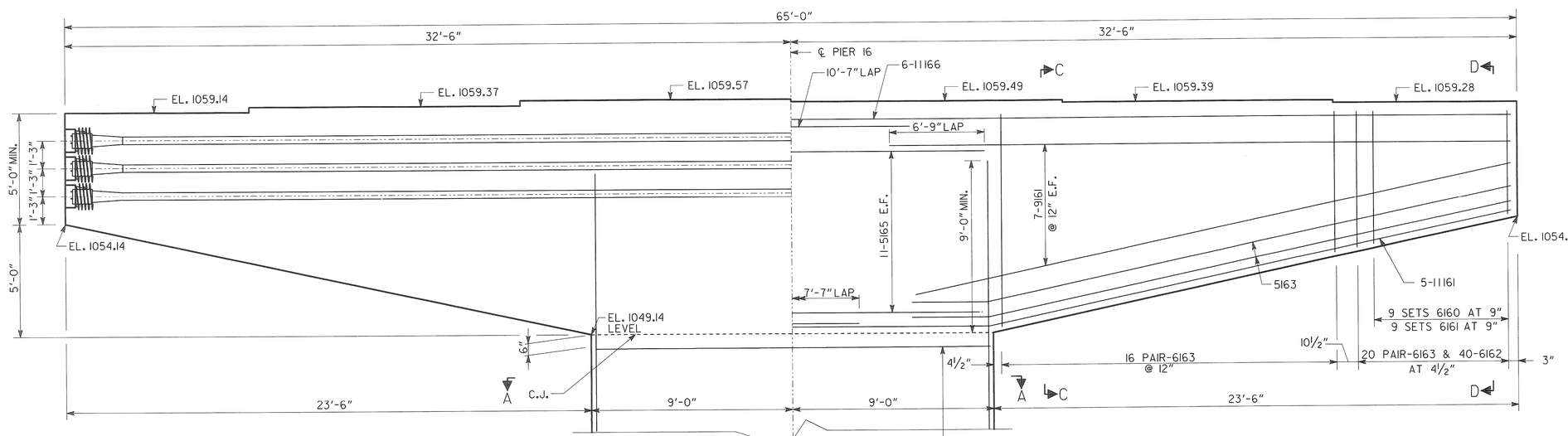

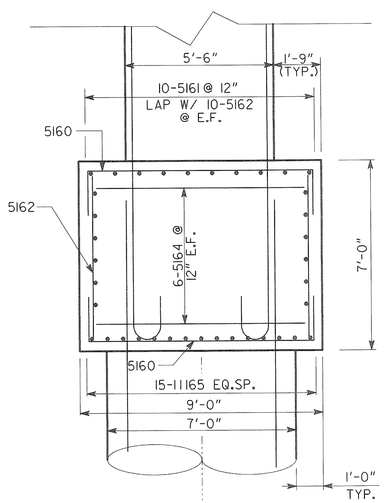

SECTION E-E
NO SCALE

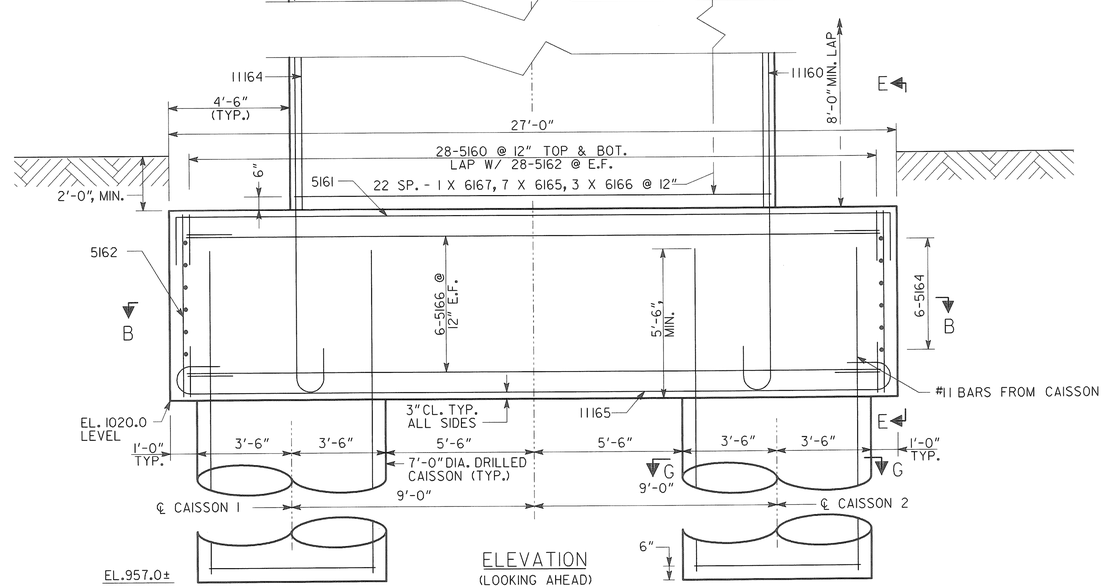

ELEVATION
(LOOKING AHEAD)

NOTE:

1. DRILLED CAISSONS ARE DESIGNED FOR A BEARING CAPACITY OF 100 KSF.
2. SOCKET CAISSONS A MINIMUM OF 5'-0" INTO SOUND ROCK.
3. MAINTAIN 2" CL. ON ALL REINFORCEMENT UNLESS NOTED OTHERWISE.
4. TEMPORARY CASING WILL BE REQUIRED TO INSTALL THE CAISSONS TO THE BEARING ELEVATIONS.
5. ALL CAISSONS SHALL BE DEWATERED TO ALLOW FOR THE INSPECTION OF THE BEARING SURFACE. A MINIMUM TEST HOLE OF 6 FEET WILL BE REQUIRED TO INSURE THERE ARE NO WEAK SEAMS UNDER THE SHAFT.
6. CAP ELEVATIONS SHOWN ARE BASED ON THE "H" DIMENSION SHOWN ON THE DISC BEARING DETAILS SHEET. THESE ELEVATIONS SHALL BE ADJUSTED BY THE CONTRACTOR TO ACCOUNT FOR THE ACTUAL HEIGHT OF THE DISC BEARING TO BE USED. PIER CAP CONCRETE SHALL NOT BE POURED UNTIL THE DISC BEARING SHOP DRAWINGS HAVE BEEN APPROVED AND NECESSARY ADJUSTMENTS HAVE BEEN MADE.

SUBSTRUCTURE QUANTITIES	
ITEM	PIER 16
CY CLASS AAA CONCRETE	256.0
LB BAR REINF STEEL	45640

BRIDGE NO. 1

Heath & Lineback Engineers
INCORPORATED
2390 CANTON ROAD, BUILDING 200
MARIETTA, GEORGIA 30066-5393
(770)424-1668

GEORGIA
DEPARTMENT OF TRANSPORTATION
ENGINEERING DIVISION-OFFICE OF BRIDGES AND STRUCTURES

INTERMEDIATE BENT DETAILS - PIER 16
SPRING STREET VIADUCT OVER
CSX TRANSPORTATION

FULTON COUNTY
BHNLB-9073-00(016)
BRNLB-9073-00(018)

SCALE: 3/8" = 1'-0"
JULY 2013

DRAWING NO. 35 - 066
BRIDGE SHEET 66 OF 79

REVISIONS | DATE | BY

DESIGNED KAK | CHECKED RLF/GBL | REVIEWED WMD/DLC
DRAWN JRL | DESIGN GROUP SWW | APPROVED BFR

1 INCH WHEN PRINTED FULL SIZE

J:\ 201104 \ BRIDGE \ BRIDGE 1 \ SSI_IBT7A.DGN