STATE	PROJECT NUMBER	SHEET NO.	TOTAL SHEETS
GA.	BHNLB-9073-00(016) BRNLB-9073-00(018)	142	444

DIMENSION "D" IS MEASURED FROM TOP OF SLAB TO TOP OF BEAMS AT CENTERLINE BEARING. VARY "D" BETWEEN BEARINGS TO COMPENSATE FOR DEAD LOAD DEFLECTION. MAINTAIN A CONSTANT SLAB THICKNESS OF 7¾" BETWEEN BEAMS AND 9¾" AT OVERHANGS.

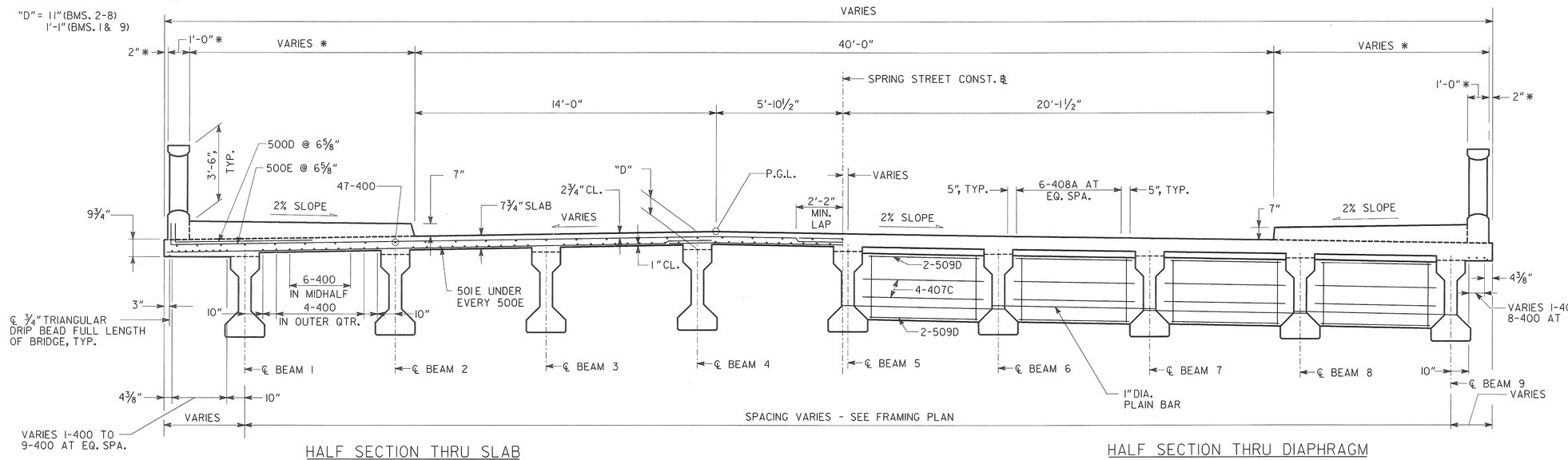

HALF SECTION THRU SLAB

LOOKING UPSTATION

HALF SECTION THRU DIAPHRAGM

LOOKING UPSTATION

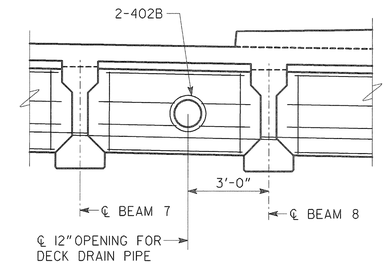

DECK DRAIN OPENING IN DIAPHRAGM

DETAIL OF OPENING IN PIER 18 EDGE BEAM & SPAN 19 DIAPRAGM SIMILAR

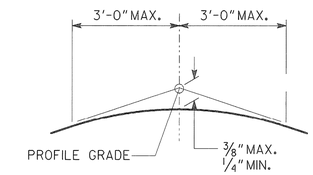

CROWN DETAIL

TRANSITION TO CROWN WITHIN 3' OF P.G.L.

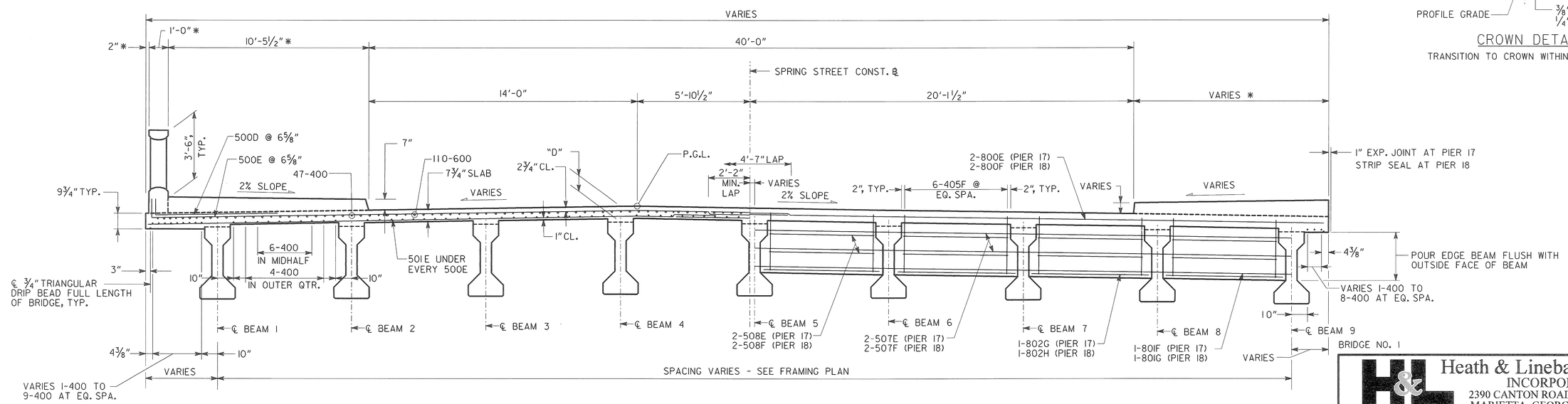

HALF SECTION THRU SLAB AT PIER 18

LOOKING UPSTATION

HALF SECTION THRU EDGE BEAM

LOOKING UPSTATION

NOTES:

1. MAINTAIN 2" CLEARANCE ON ALL REINFORCEMENT UNLESS OTHERWISE NOTED.
2. * SEE DECK PLAN FOR LIMITS OF SIDEWALK AND PARAPET.
3. SPACING OF 500 AND 501 BARS IS ALONG LEFT EDGE OF BRIDGE.
4. BARS 405 ARE PLACED PARALLEL TO BEAM.

Heath & Lineback Engineers
INCORPORATED
2390 CANTON ROAD, BUILDING 200
MARIETTA, GEORGIA 30066-5393
(770)424-1668

GEORGIA
DEPARTMENT OF TRANSPORTATION
ENGINEERING DIVISION-OFFICE OF BRIDGES AND STRUCTURES

DECK SECTION
SPAN 18
SPRING STREET VIADUCT OVER
CSX TRANSPORTATION

FULTON COUNTY — BHNLB-9073-00(016) BRNLB-9073-00(018)

SCALE: ⅜" = 1'-0" — JULY 2013

DRAWING NO.	REVISIONS	BY	DATE
35 - 025			
BRIDGE SHEET 25 OF 79			

DESIGNED	KAK	CHECKED	RLF/GBL	REVIEWED	WMD/DLC
DRAWN	JRL	DESIGN GROUP	SWW	APPROVED	BFR

1 INCH WHEN PRINTED FULL SIZE

JRL 2011024 \ BRIDGE \ BRIDGE 1 \ SS1 DS8.DGN