STATE	PROJECT NUMBER	SHEET NO.	TOTAL SHEETS
GA.	BHNLB-9073-00(016) BRNLB-9073-00(018)	137	444

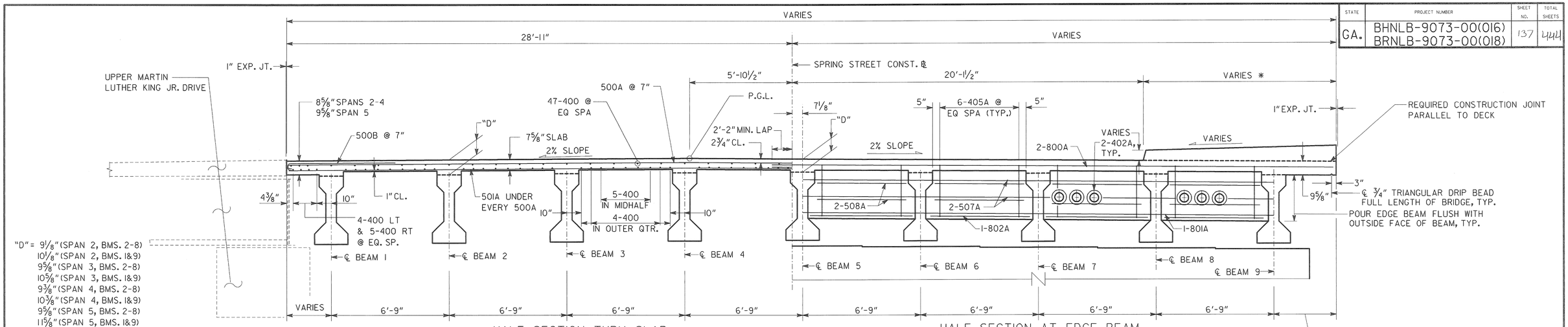

DIMENSION "D" IS MEASURED FROM TOP OF SLAB TO TOP OF BEAMS AT CENTERLINE OF BEARING. VARY "D" BETWEEN BEARINGS TO COMPENSATE FOR DEAD LOAD DEFLECTION AND VERTICAL CURVE. MAINTAIN A CONSTANT SLAB THICKNESS OF 7⅝" BETWEEN BEAMS AND 8⅝" OR 9⅝" AT THE OVERHANGS.

HALF SECTION THRU SLAB

(SPAN 5 AT MLK JR. DR.)
LOOKING UPSTATION

HALF SECTION AT EDGE BEAM

(PIERS 1, 2, 3, AND 4 SHOWN, PIER 5 SIMILAR)
LOOKING UPSTATION

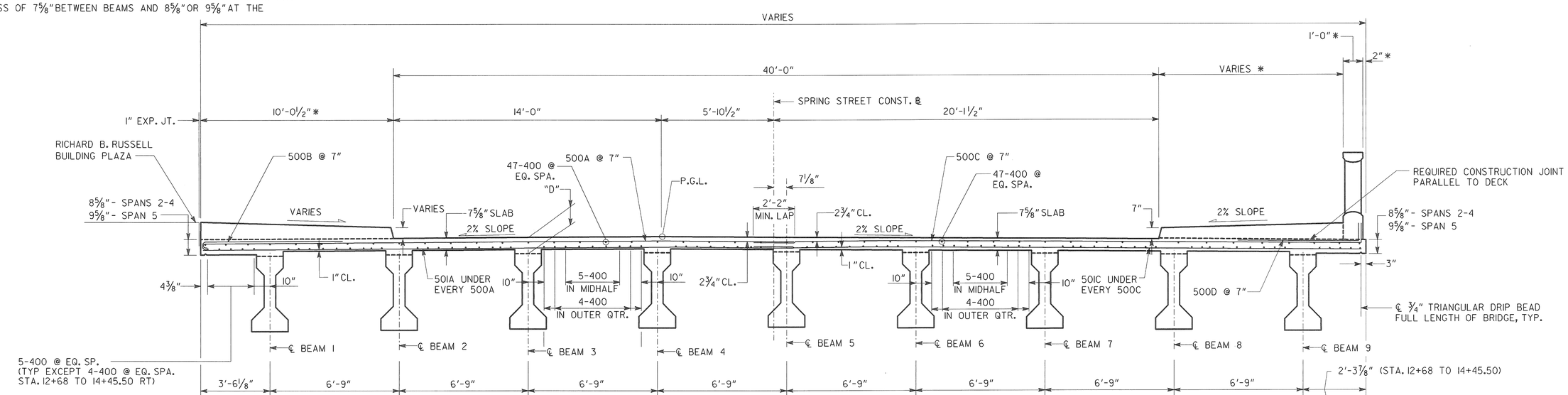

HALF SECTION THRU SLAB

LOOKING UPSTATION

HALF SECTION THRU SLAB

SPAN 5
LOOKING UPSTATION

BRIDGE NO. 1

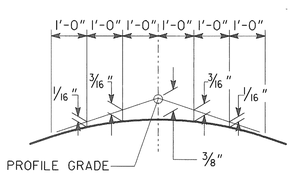

CROWN DETAIL

2% CROSS SLOPE

NOTES:

1. MAINTAIN 2" CLEARANCE ON ALL REINFORCEMENT UNLESS OTHERWISE NOTED.
2. * SEE DECK PLAN FOR LIMITS OF SIDEWALK AND PARAPET
3. BARS 405 ARE PLACED PARALLEL TO BEAM.
4. ADJUST REINFORCING AS NEEDED TO CLEAR UTILITY OPENINGS.

Heath & Lineback Engineers
INCORPORATED
2390 CANTON ROAD, BUILDING 200
MARIETTA, GEORGIA 30066-5393
(770)424-1668

GEORGIA
DEPARTMENT OF TRANSPORTATION
ENGINEERING DIVISION-OFFICE OF BRIDGES AND STRUCTURES

DECK SECTION
SPANS 2-5
SPRING STREET VIADUCT OVER
CSX TRANSPORTATION

FULTON COUNTY

BHNLB-9073-00(016)
BRNLB-9073-00(018)

SCALE: ⅜" = 1'-0"

JULY 2013

DRAWING NO.	REVISIONS	DATE	BY
35 - 020			
BRIDGE SHEET 20 OF 79			

DESIGNED	KAK	CHECKED	RLF/GBL	REVIEWED	WMD/DLC
DRAWN	JRL	DESIGN GROUP	SWW	APPROVED	BFR

1 INCH WHEN PRINTED FULL SIZE

J:\ 201104 \ BRIDGE \ BRIDGE 1 \ SS1 DS3.DGN