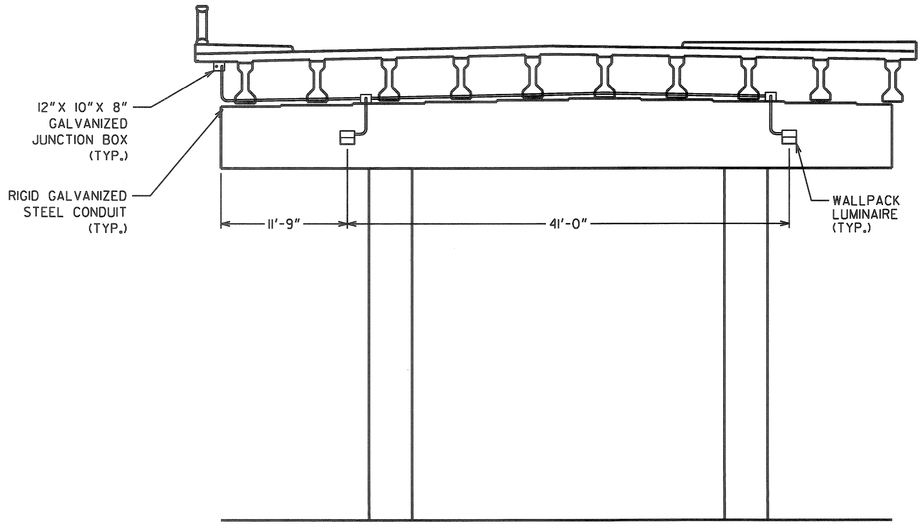

EXISTING MARTIN LUTHER KING BRIDGE PIER 1A ELEVATION
(LOOKING DOWNSTATION)

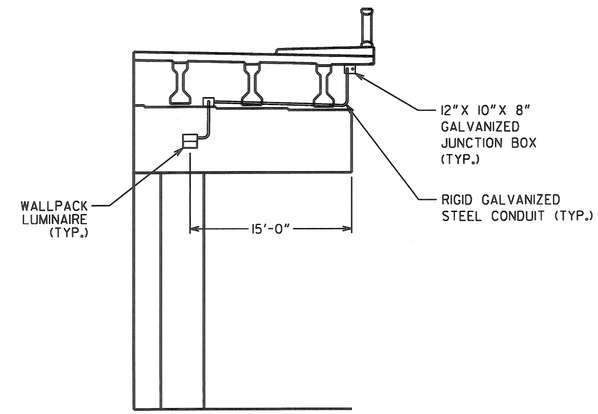

EXISTING MARTIN LUTHER KING
BRIDGE PIER 3A ELEVATION
(LOOKING UPSTATION)

NOTES

1. WALLPACK LUMINAIRES SHALL BE MOUNTED TO BRIDGE BENTS, PIERS OR WALLS AS SHOWN. LAMP TYPE SHALL BE 150 WATT HIGH PRESSURE SODIUM (HPS) OR 250 WATT METAL HALIDE (MH) AS SPECIFIED IN LUMINAIRE SCHEDULE. INPUT OPERATING VOLTAGE SHALL BE 208 VAC. (HPS) BALLAST SHALL BE HIGH POWER FACTOR HIGH REACTANCE (HX) WITH A PUBLISHED MAXIMUM INPUT CURRENT NOT EXCEEDING 1.82 AMPERES AND A POWER FACTOR ABOVE 90%. MH BALLAST SHALL BE EISA COMPLIANT, 88% EFFICIENT, SCWA (SUPER CONSTANT WATTAGE AUTOTRANSFORMER) PULSE START TYPE WITH A PUBLISHED MAXIMUM INPUT CURRENT NOT EXCEEDING 1.51 AMPERES. LUMINAIRE OPTICS SHALL UTILIZE IMPACT-RESISTANT, TEMPERED GLASS REFRACTOR PRODUCING AN IES TYPE IV PATTERN.

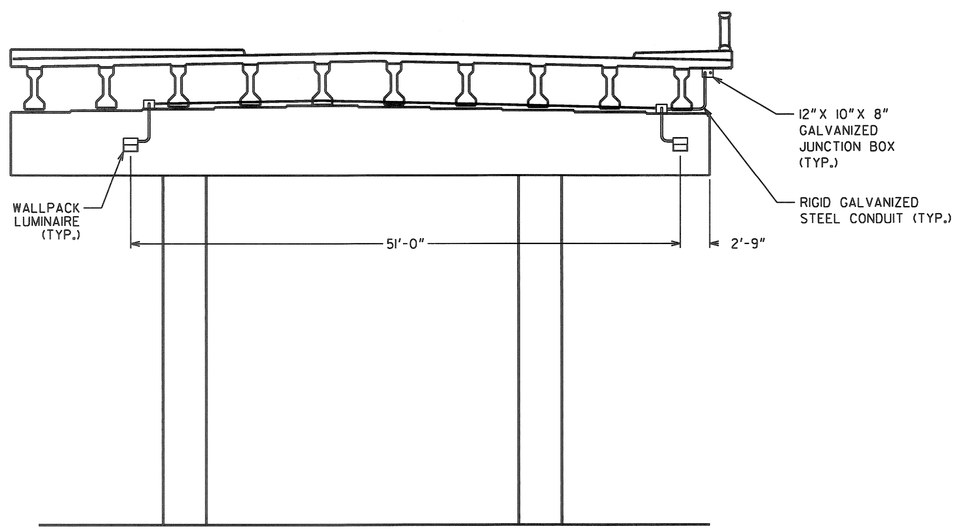

EXISTING MARTIN LUTHER KING BRIDGE PIER 2A ELEVATION
(LOOKING UPSTATION)

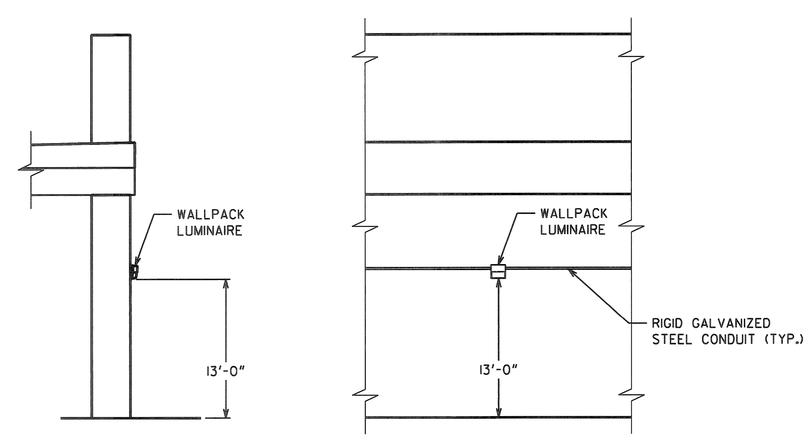

LOWER MARTIN LUTHER KING RETAINING WALL
PROFILE AND ELEVATION

GRESHAM SMITH AND PARTNERS

Heath & Lineback Engineers
INCORPORATED
2390 CANTON ROAD, BUILDING 200
MARIETTA, GEORGIA 30066-5393

NOT TO SCALE

REVISION DATES

STATE OF GEORGIA
DEPARTMENT OF TRANSPORTATION
OFFICE: URBAN DESIGN

WALL-MOUNTED LUMINAIRE DETAILS (2 OF 2)

SPRING STREET
VIADUCT OVER CSX

DRAWING No. 25-022

3/1/2007 GPLH