STATE	PROJECT NUMBER	SHEET NO.	TOTAL SHEETS
GA.	STP-189-1(26) CO	486	612

* FORM 3"DIA. X 12"DEEP HOLE FOR DOWEL BAR

NOTE: MAINTAIN 2"CL. ON ALL REINFORCEMENT UNLESS OTHERWISE NOTED

NOTE: BENT CAP IS SYMMETRICAL ABOUT CENTERLINE OF CAP

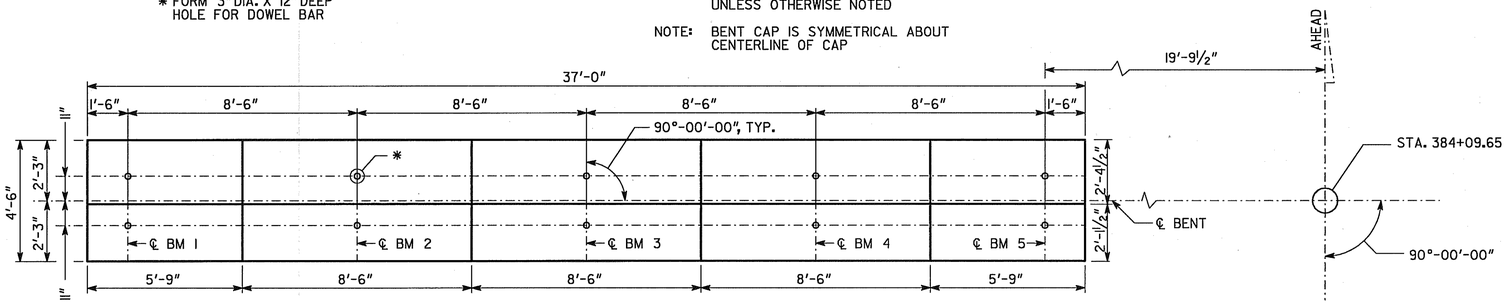

PLAN

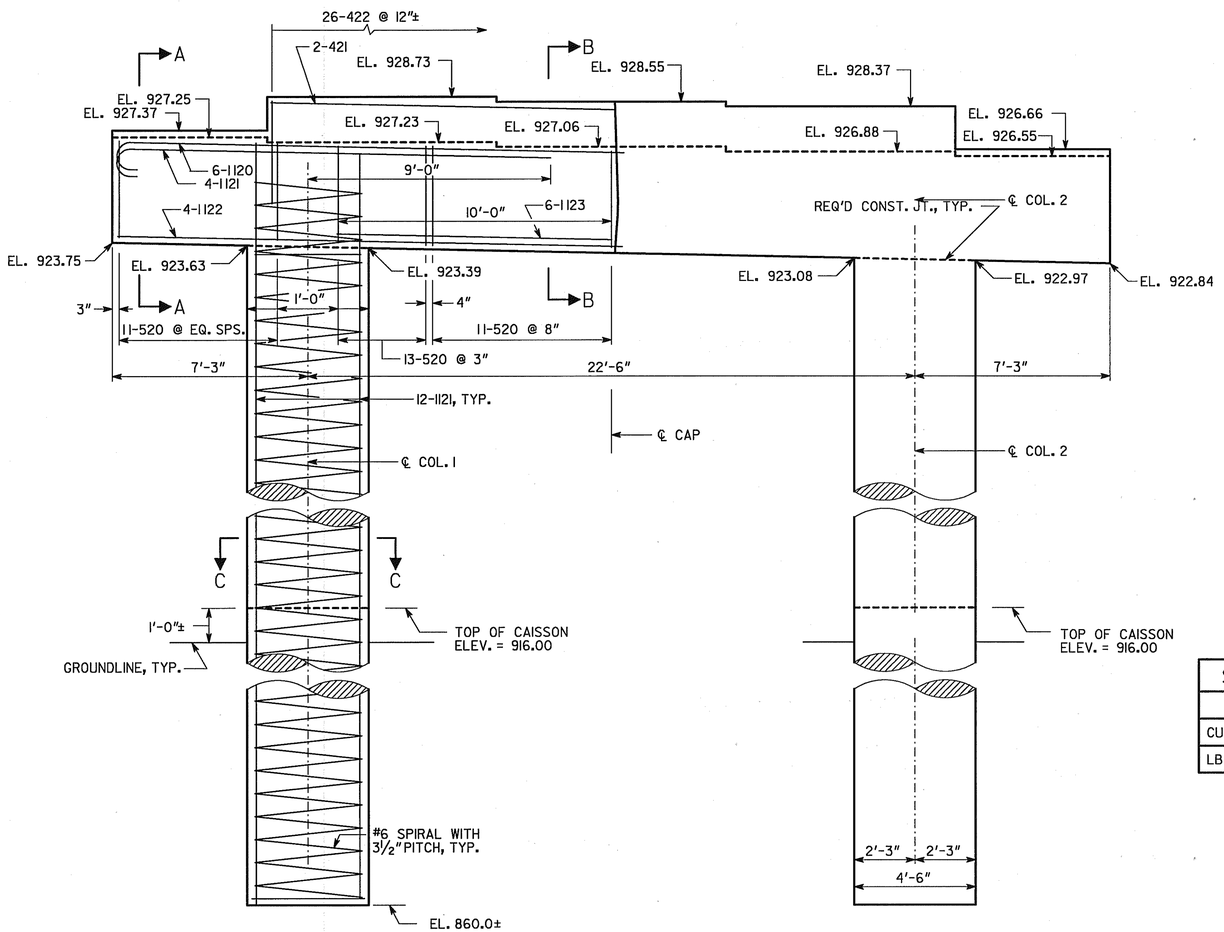

ELEVATION

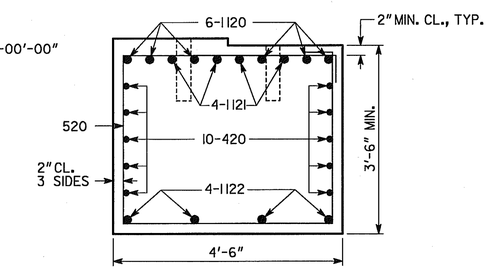

SECTION A-A

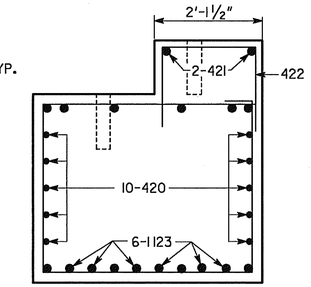

SECTION B-B

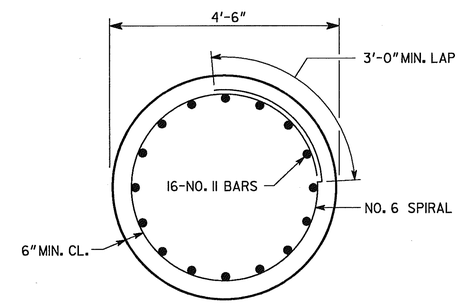

SECTION C-C

CAISSON NOTES

DESIGN CAPACITY OF EACH CAISSON IS 238 TONS.

SPIRALS SHALL HAVE TWO(2) CLOSED TURNS AT TOP OF CAP AND BOTTOM OF CAISSON.

SPIRAL SPLICES SHALL BE ACCOMPLISHED BY LAPPING A MIMINUM OF 3'-0" OR BY LAPPING AND WELDING 1.5 TURNS.

AT CONTRACTORS OPTION, #5 STIRRUPS AT 6" SPACING WITH 1'-2" LAP MAY BE SUBSTITUTED FOR SPIRAL IN CAISSON. NO ADDITIONAL PAYMENT WILL BE ALLOWED.

BOTTOM OF CAISSON ELEVATION REFLECTS A MINIMUM PENETRATION OF 10 FEET INTO PARTIALLY WEATHERED ROCK.

COST OF NO. 11 BARS SHALL BE INCLUDED IN PRICE BID FOR "LF DRILLED CAISSON, 54 IN."

SUBSTRUCTURE QUANTITIES

ITEM	BENT 2
CU YD CLASS "A" CONCRETE	32.2
LB BAR REINFORCEMENT STEEL	4918

BRIDGE NO. 1 LEFT

GEORGIA
DEPARTMENT OF TRANSPORTATION
PRECONSTRUCTION DIVISION-OFFICE OF BRIDGE DESIGN

BENT 2 DETAILS

STATE BRIDGE RD. OVER JOHN'S CREEK

FULTON CO. BRF-189-1(27) CO. CT. 2

NO SCALE SEPTEMBER 2002

DATE	REVISIONS	BY

BRIDGE SHEET 14 OF 19

DESIGNED LA III CHECKED JBK REVIEWED JPT/MCD
DRAWN WRW DESIGN GROUP LA III APPROVED PVL

FILENAME: STATEBRF68.DGN