STATE	PROJECT NUMBER	SHEET NO.	TOTAL SHEETS
GA.	STP-189-1(267)CO	478	612

VOID

DIMENSION "D" IS MEASURED FROM TOP OF SLAB TO TOP OF BEAMS AT CENTERLINE BEARING. VARY "D" BETWEEN BEARINGS TO COMPENSATE FOR DEAD LOAD DEFLECTION AND VERTICAL CURVE, MAINTAIN A CONSTANT SLAB THICKNESS OF 8 1/8" BETWEEN BEAMS AND 9 3/4" AT THE OVERHANGS.
"D" = 10 3/4" FOR INTERIOR BEAMS
"D" = 12 5/8" FOR EXTERIOR BEAMS

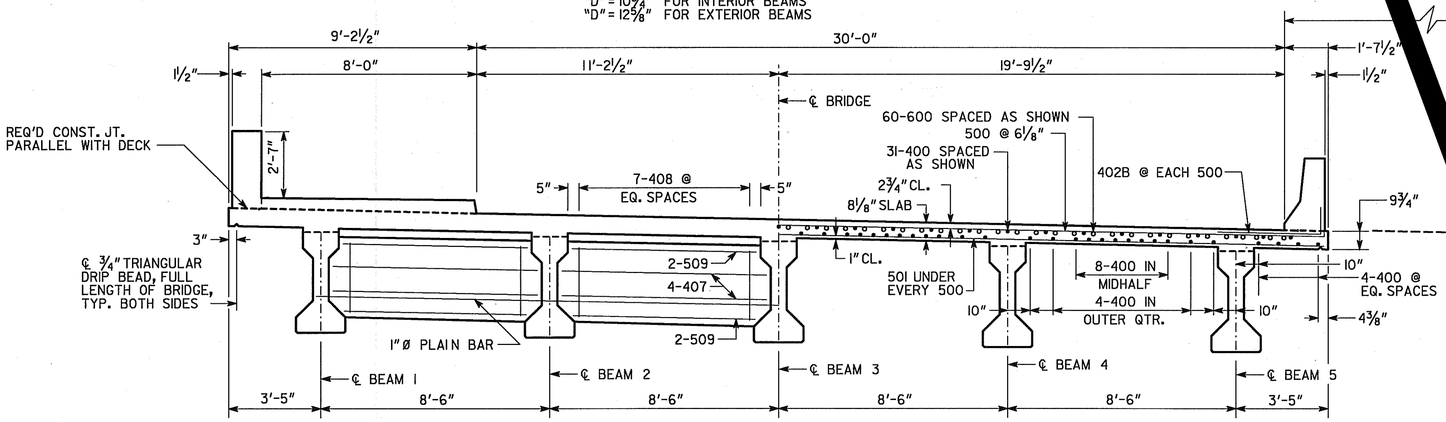

HALF SECTION AT DIAPHRAGM

HALF SECTION THRU SLAB

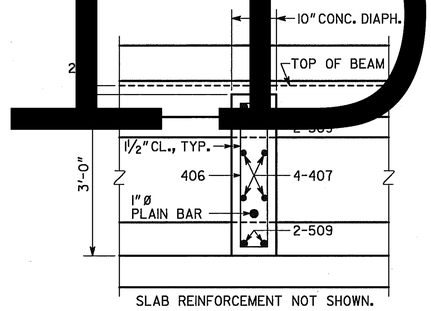

SECTION THRU DIAPHRAGM

NOTES:
CLEARANCE OF REINFORCEMENT IS 2" UNLESS NOTED.

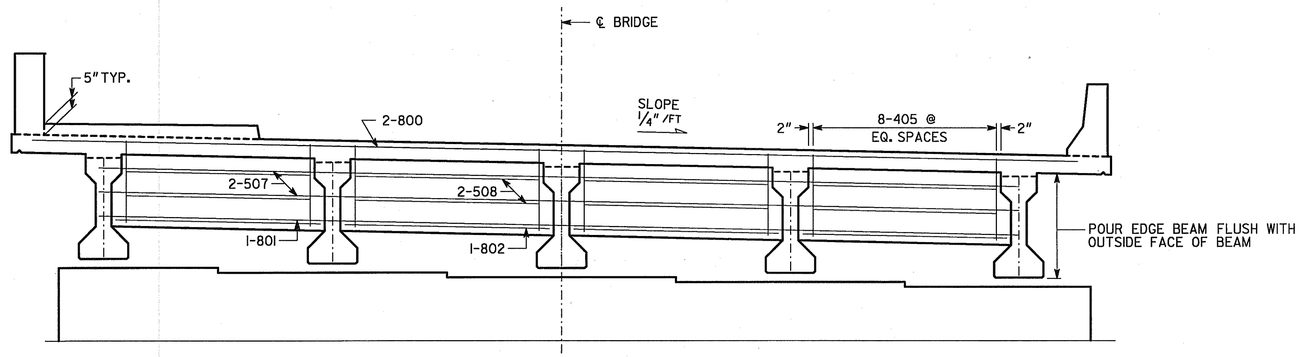

SECTION AT EDGE BEAM

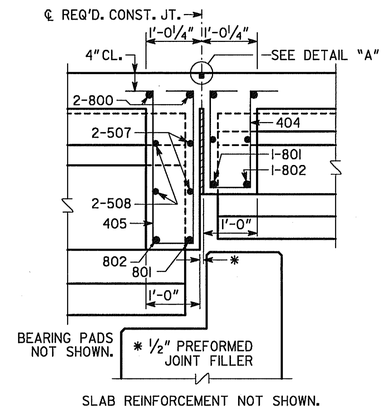

SECTION THRU EDGE BEAM
(BENT 3)

PLACE TRANSVERSE SIDEWALK MARKINGS ON SIDEWALK SPACED AT 5'-0"±.

COST OF BOND BREAKER AND EPOXY ADHESIVE TO BE INCLUDED IN PRICE BID FOR SUPERSTRUCTURE ITEMS.

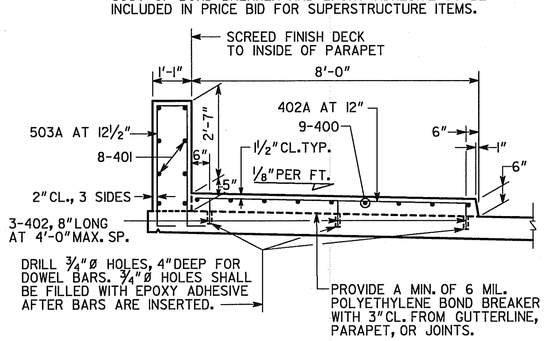

SIDEWALK AND PARAPET DETAILS

* TAPERS TO 0" AT END POST

** AT CONTRACTOR'S OPTION, 10" RADIUS MAY BE REPLACED BY STRAIGHT INTERSECTING SLOPES.

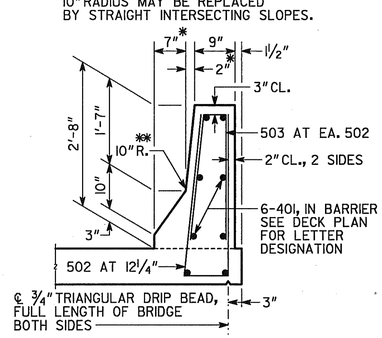

BARRIER DETAIL

BRIDGE NO. 1 - LEFT

GEORGIA
DEPARTMENT OF TRANSPORTATION
PRECONSTRUCTION DIVISION-OFFICE OF BRIDGE DESIGN

DECK SECTION - SPAN 2
STATE BRIDGE RD. OVER JOHN'S CREEK
FULTON CO. BRF-189-1(27) CO. CT. 2

NO SCALE SEPTEMBER 2002

BY	REVISIONS	DATE

BRIDGE SHEET 6 OF 18

DESIGNED LA III CHECKED JBK REVIEWED J.P.T./M.C.D.
DRAWN WRW DESIGN GROUP LA III APPROVED P.V.L.

FILENAME: STATEBRPE8.DGN

d:\Bob\statebrpe8.dgn 12/04/2002 02:34:26 PM