STATE	PROJECT NUMBER	SHEET NO.	TOTAL SHEETS
GA.	STP-189-1(26)	477A	612

DIMENSION "D" IS MEASURED FROM TOP OF SLAB TO TOP OF BEAMS AT CENTERLINE BEARING. VARY "D" BETWEEN BEARINGS TO COMPENSATE FOR DEAD LOAD DEFLECTION AND VERTICAL CURVE. MAINTAIN A CONSTANT SLAB THICKNESS OF 8¼" BETWEEN BEAMS AND 9¾" AT THE OVERHANGS.

"D" = 9¾" FOR INTERIOR BEAMS

"D" = 11⅛" FOR EXTERIOR BEAMS

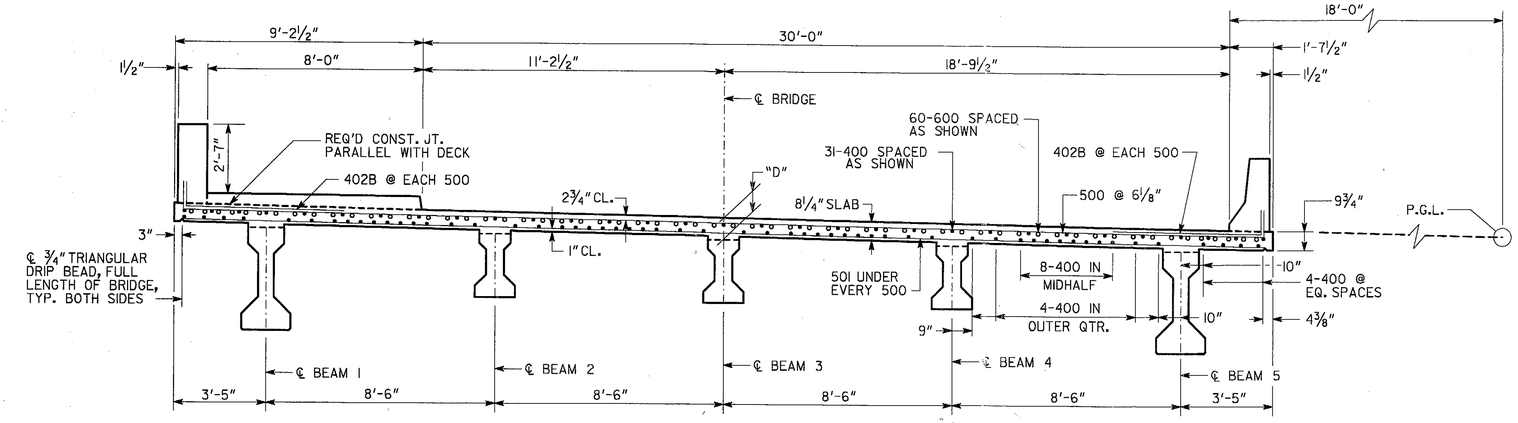

SECTION THRU SLAB

CLEARANCE OF REINFORCEMENT IS 2" UNLESS NOTED.

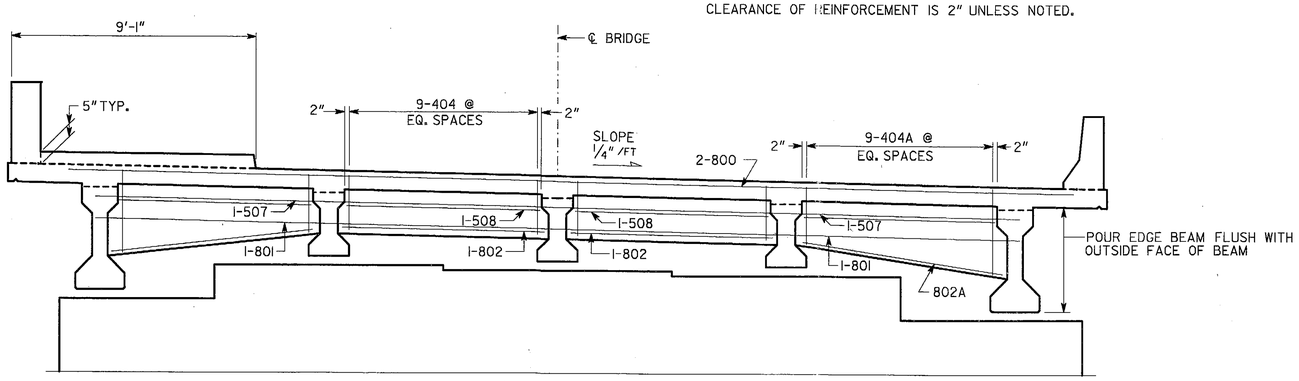

SECTION AT EDGE BEAM

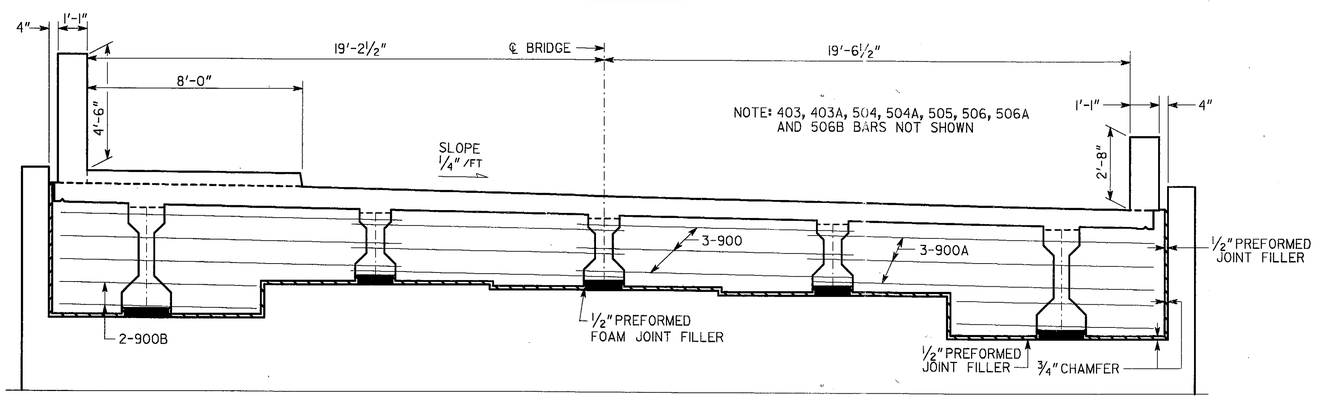

SECTION AT ENDWALL

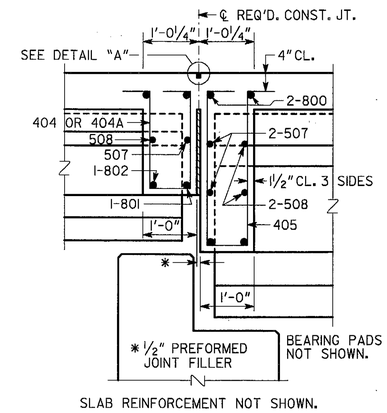

SECTION AT EDGE BEAM

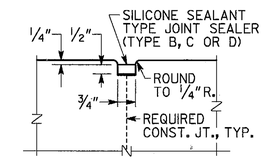

DETAIL "A"

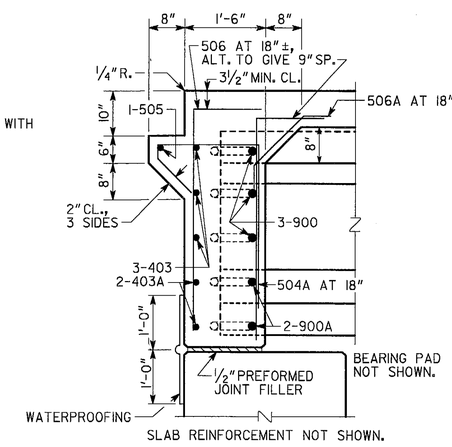

SECTION AT ENDWALL
(EXTERIOR BEAM)

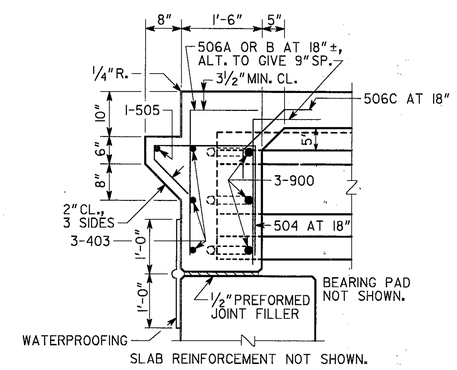

SECTION AT ENDWALL

BRIDGE NO. 1 LEFT

GEORGIA
DEPARTMENT OF TRANSPORTATION
PRECONSTRUCTION DIVISION-OFFICE OF BRIDGE DESIGN

DECK SECTION - SPANS 1 & 3
STATE BRIDGE RD. OVER JOHN'S CREEK
FULTON CO. BRF-189-1(27) CO. CT. 2

NO SCALE — SEPTEMBER 2002

REVISIONS	BY	DATE
ADDED "D" DIMENSION	LAM	9-5-03

BRIDGE SHEET 5 OF 18

DESIGNED L.A.M. — CHECKED J.B.K. — REVIEWED J.P.T./M.C.D.
DRAWN WRW — DESIGN GROUP L.A.M. — APPROVED P.V.L.

FILENAME: STATEBRFB2.DGN

USE ON CONSTRUCTION