STATE	PROJECT NUMBER	SHEET NO.	TOTAL SHEETS
GA.	STP-189-1(26)CO	477	612

VOID

DIMENSION "D" IS MEASURED FROM TOP OF SLAB TO TOP OF BEAMS AT CENTERLINE BEARING. VARY "D" BETWEEN BEARINGS TO COMPENSATE FOR DEAD LOAD DEFLECTION AND VERTICAL CURVE. MAINTAIN A CONSTANT SLAB THICKNESS OF 8¼" BETWEEN BEAMS AND 9¾" AT THE OVERHANGS.

"D" = 9¾" FOR INTERIOR BEAMS

"D" = 11⅛" FOR EXTERIOR BEAMS

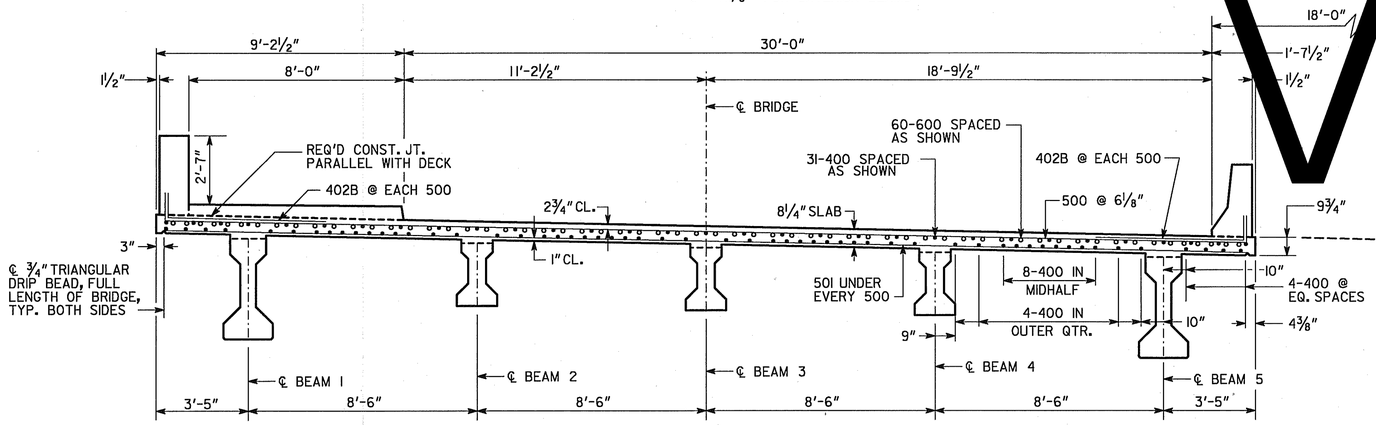

SECTION THRU SLAB

CLEARANCE OF REINFORCEMENT IS 2" UNLESS NOTED.

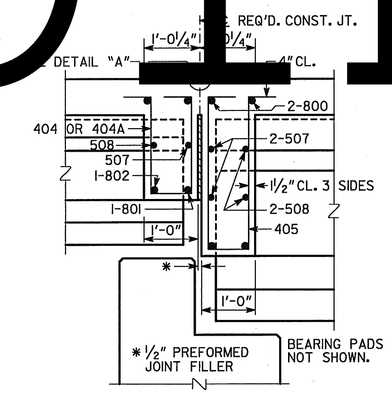

SLAB REINFORCEMENT NOT SHOWN.

SECTION AT EDGE BEAM

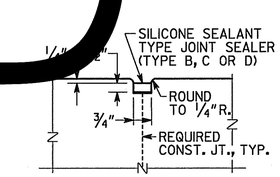

DETAIL "A"

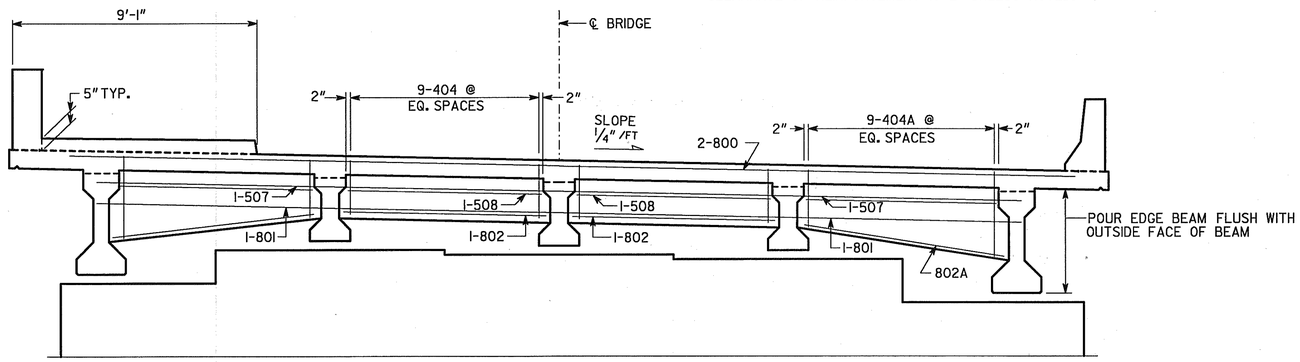

SECTION AT EDGE BEAM

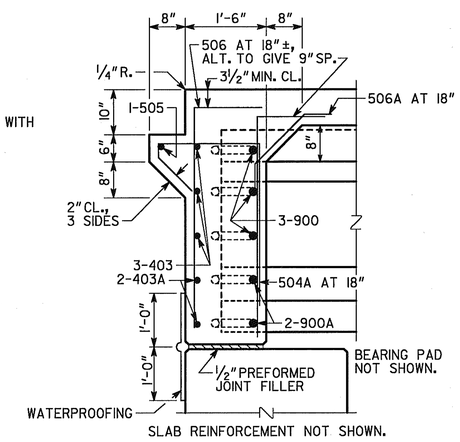

SLAB REINFORCEMENT NOT SHOWN.

SECTION AT ENDWALL

(EXTERIOR BEAM)

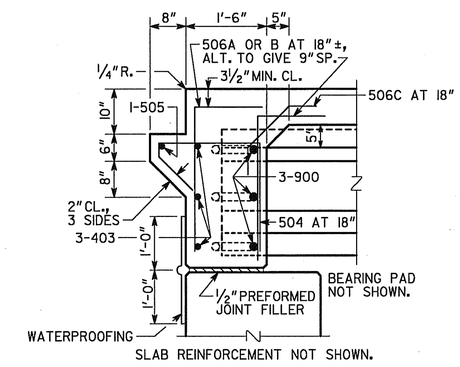

SLAB REINFORCEMENT NOT SHOWN.

SECTION AT ENDWALL

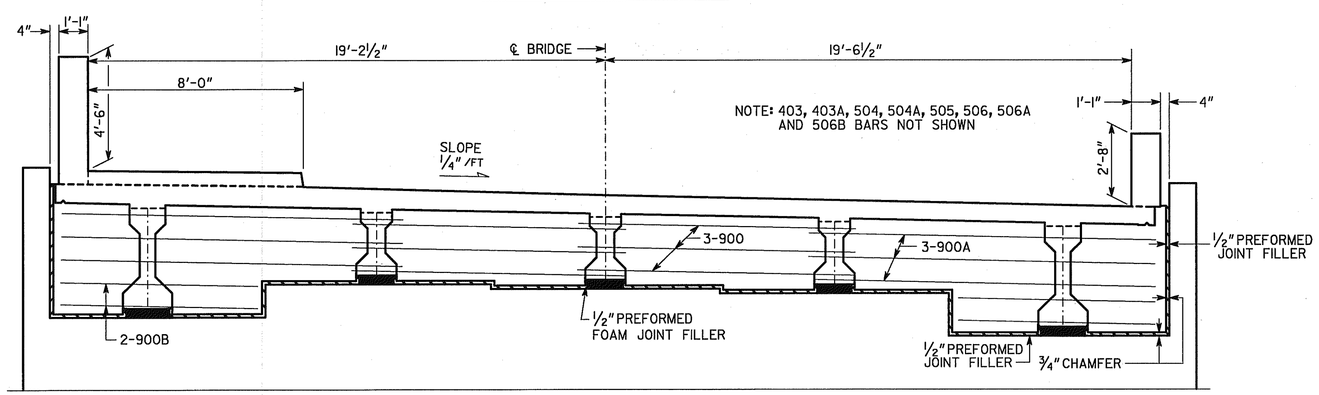

SECTION AT ENDWALL

BRIDGE NO. 1 LEFT

GEORGIA

DEPARTMENT OF TRANSPORTATION

PRECONSTRUCTION DIVISION-OFFICE OF BRIDGE DESIGN

DECK SECTION - SPANS 1 & 3

STATE BRIDGE RD. OVER JOHN'S CREEK

FULTON CO. BRF-189-1(27) CO. CT. 2

NO SCALE SEPTEMBER 2002

DATE	REVISIONS	BY

BRIDGE SHEET 5 OF 18

DESIGNED L.A.III CHECKED J.B.K. REVIEWED J.P.T./M.C.D.

DRAWN WRW DESIGN GROUP L.A.III APPROVED P.V.L.

FILENAME: STATEBRPE8.DGN

d:\Bob\statebrpe8.dgn 12/04/2002 02:34:06 PM