COUNTY	STATE	PROJECT NUMBER	SHEET NUMBER	TOTAL SHEETS
FULTON	GEORGIA	IRAF-005(8)909	1052	

REV 1-31-90
REV 2-28-90

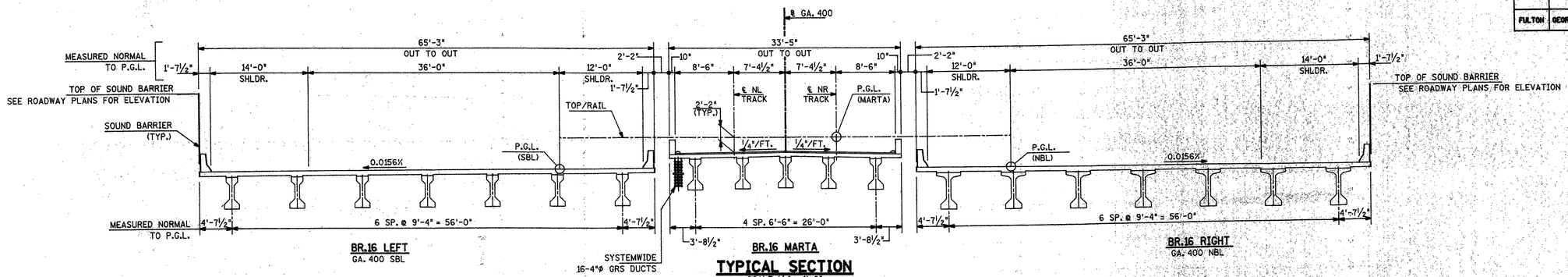

TYPICAL SECTION

SCALE: ⅛" = 1'-0"

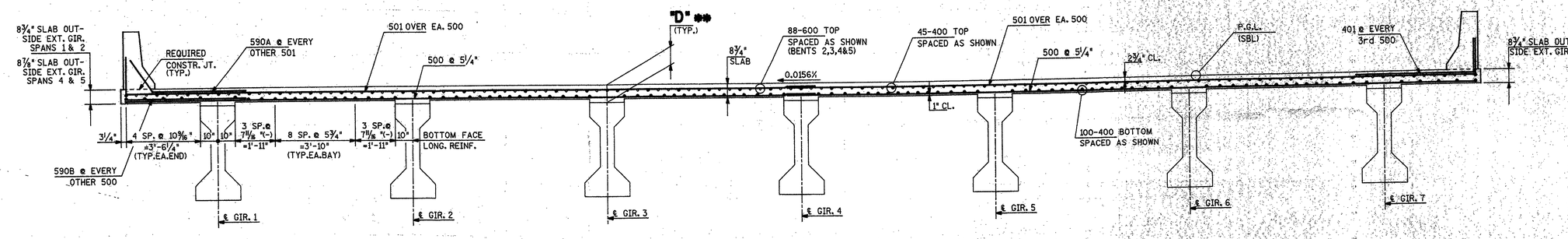

DECK SECTION - SPANS 1, 2, 4 & 5

SCALE: ⅜" = 1'-0"
LOOKING AHEAD

BR.16 LT.- SHOWN
BR.16 RT.- OPP. HAND

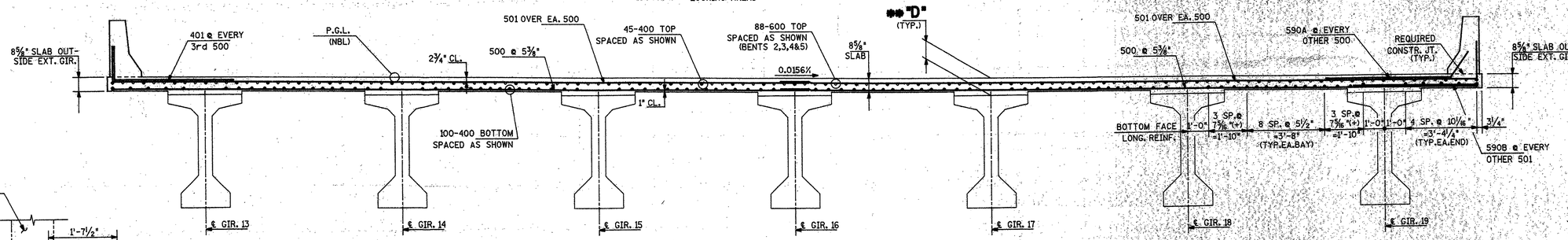

DECK SECTION - SPAN 3

SCALE: ⅜" = 1'-0"
LOOKING AHEAD

BR.16 RT.- SHOWN
BR.16 LT.- OPP. HAND

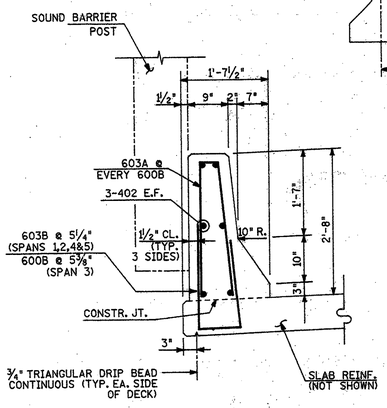

DETAIL
OUTSIDE SHOULDER
TRAFFIC BARRIER REINFORCING

SCALE: ¾"=1'-0"

FIELD BEND BARS 603 AND 591 FOR USE IN BARRIER TRANSITION.

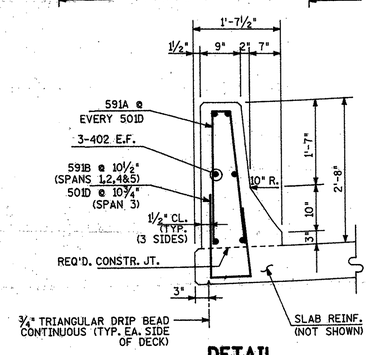

DETAIL
INSIDE SHOULDER
TRAFFIC BARRIER REINFORCING

SCALE: ¾"=1'-0"

** "D" DIMENSION

BR.16 LT. & RT.	
SPAN	"D"
1&2 EXT.	11¾"
1&2 INT.	11⅝"
3	11⅞"
4&5	11¾"

NOTES:
1. "D" DIMENSION SHALL BE MEASURED FROM TOP OF SLAB TO TOP OF GIRDER AT INTERSECTION OF ℄ BEARING AND ℄ GIRDER.
2. VARY "D" BETWEEN BEARINGS TO COMPENSATE FOR P/S DEFLECTION, DEAD LOAD DEFLECTION AND VERTICAL CURVE.
3. MAINTAIN A CONSTANT SLAB THICKNESS AS INDICATED ON SECTIONS BETWEEN COPINGS, AND IN OVERHANGS.

FOR INFORMATION ONLY

REVISIONS					
DATE	BY	DESCRIPTION	DATE	BY	DESCRIPTION
1-19-90	MWB	REVISED AND REDRAWN			
2-2-90	JCO	REVISED AND REDRAWN			

DEVCON DESIGN GROUP, INC.
3290 Cumberland Club Drive
Atlanta, Georgia 30339

	NAME	DATE		NAME	DATE
DESIGNED BY	AP	10-89	DRAWN BY	TRN	10-89
CHECKED BY	SAC	10-89	CHECKED BY	AP	10-89

SUPERVISED BY S. A. CURTIS

GEORGIA DEPARTMENT OF TRANSPORTATION
DOT LIASON - RTA | REVIEWED RJS/BDM
PROJECT NO. MLP-400(27) FULTON

GA. 400 EXTENSION
TYPICAL SECTIONS - BR.16 LT. & RT.
BRIDGE NO. 16 - GA. 400 OVER NANCY CREEK

DRAWING NUMBER S-6 OF S-40

SC52.6667 EG27B 886

GA. | CO. | PROJECT NUMBER | SHEET NO. | TOTAL SHEETS
CH-05-1-156 | 151 | 151