COUNTY	STATE	PROJECT NUMBER	SHEET NUMBER	TOTAL SHEETS
FULTON	GEORGIA	IXAF-000		

Rev 8-28-90

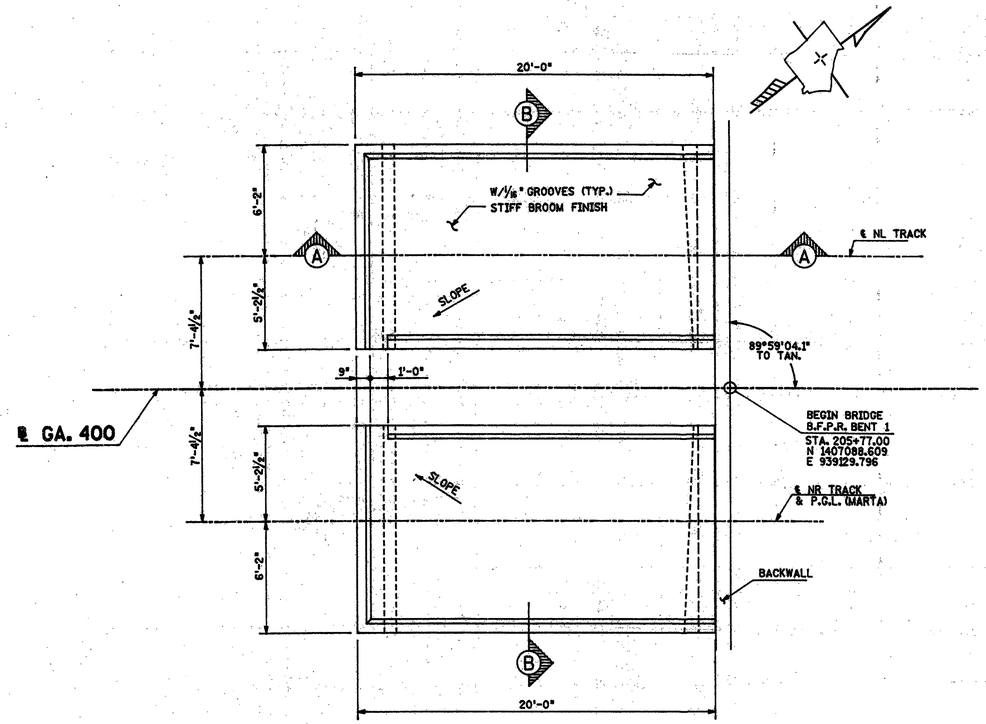

PLAN - APPROACH SLAB AT BENT 1 MARTA

SCALE: 1/4" = 1'-0"

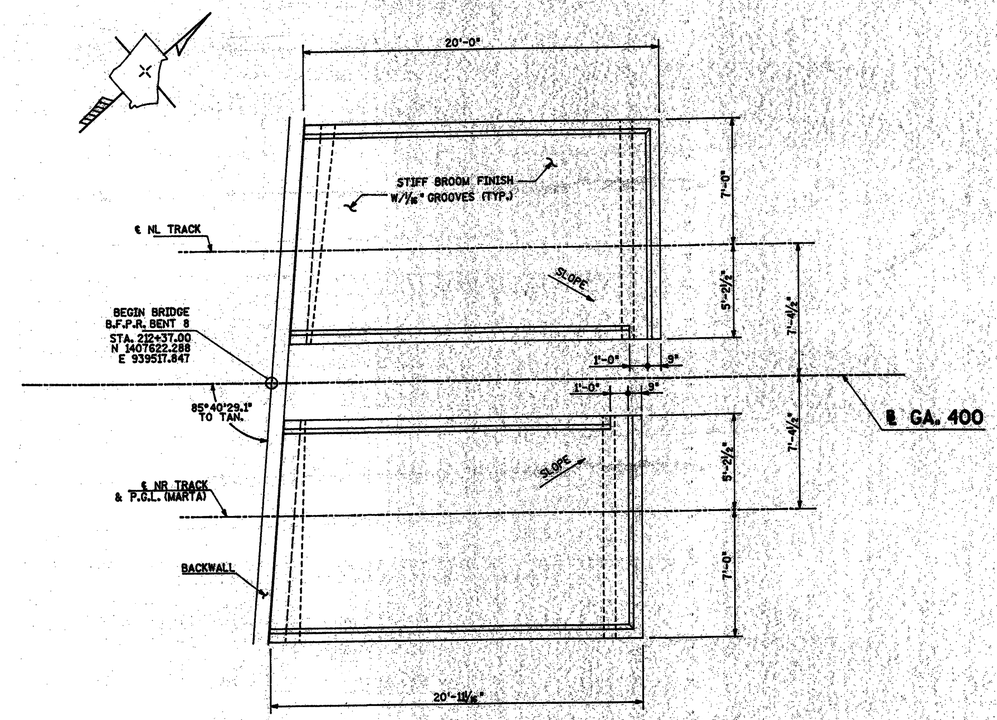

PLAN - APPROACH SLAB AT BENT 8 MARTA

SCALE: 1/4" = 1'-0"

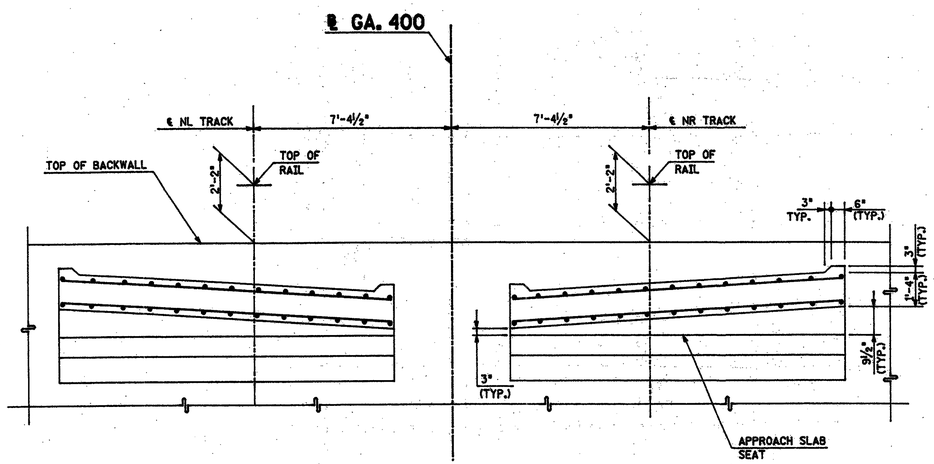

SECTION B-B

SCALE: 3/8" = 1'-0"

BENT 1 SHOWN
BENT 8 SIMILAR

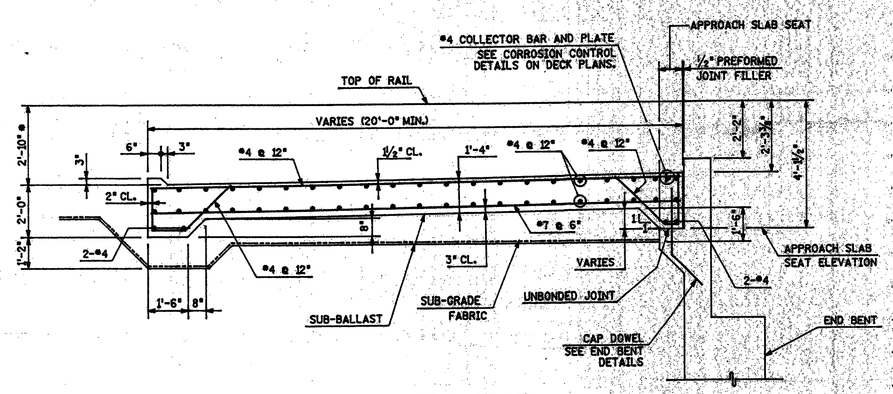

SECTION A-A AT ℄ TRACK

SCALE: 3/8" = 1'-0"

BENT 1 SHOWN
BENT 8 SIMILAR

NOTES:

1. SUBGRADE FABRIC SHALL CONFORM TO SECTION 02EP OF THE MARTA PROJECT SPECIFICATIONS.
2. THIS DIMENSION SHALL BE MEASURED FROM TOP OF RAIL AT ℄ TRACK.
3. COST OF CONCRETE AND REINFORCING ARE INCLUDED IN PRICE BID FOR REINFORCED CONCRETE APPROACH SLAB, SY.
4. SEE DECK PLANS FOR CORROSION CONTROL DETAILS.

APPROACH SLAB QUANTITIES

BENT / TRACK	SY
1 / NR	25.27
1 / NL	25.27
8 / NR	36.04
8 / NL	36.04

FOR INFORMATION ONLY

REVISIONS

DATE	BY	DESCRIPTION	DATE	BY	DESCRIPTION
1-31-90	MWB	THIS SHEET ADDED			
2-28-90	MWB	REVISED AND REDRAWN			

DEVCON DESIGN GROUP, INC.
3290 Cumberland Club Drive
Atlanta, Georgia 30339

	NAME	DATE		NAME	DATE
DESIGNED BY	SAC	1-90	DRAWN BY	MWB	1-90
CHECKED BY	SAC	1-90	CHECKED BY	SAC	1-90

SUPERVISED BY S. A. CURTIS

GEORGIA DEPARTMENT OF TRANSPORTATION
DOT LIAISON - RTA REVIEWED RJS/BDM
PROJECT NO. MLP-000(27) FULTON

GA. 400 EXTENSION
APPROACH SLAB PLAN & SECTIONS - BR. 14 MARTA
BRIDGE NO. 14 - GA. 400 OVER MOUNTAIN WAY

DRAWING NUMBER S-18 OF S-58

SC-4 6/27/84 SIB

COUNTY	STATE	PROJECT NUMBER	SHEET NUMBER	TOTAL SHEETS
FULTON	GEORGIA	CN-056-1151(26)	18	58

REVISIONS: 8/28/90 KOA
PROJECT NUMBER: CN-056-1151(26)
SHEET NUMBER: 18
TOTAL SHEETS: 58