STATE	PROJECT NUMBER	SHEET NO.	TOTAL SHEETS
GA	IXAF-000S(1)	541	934

REV 10-13-89

STATE	PROJECT NUMBER	SHEET NO.	TOTAL SHEETS
GA.	CM-056-1(56)	80	157

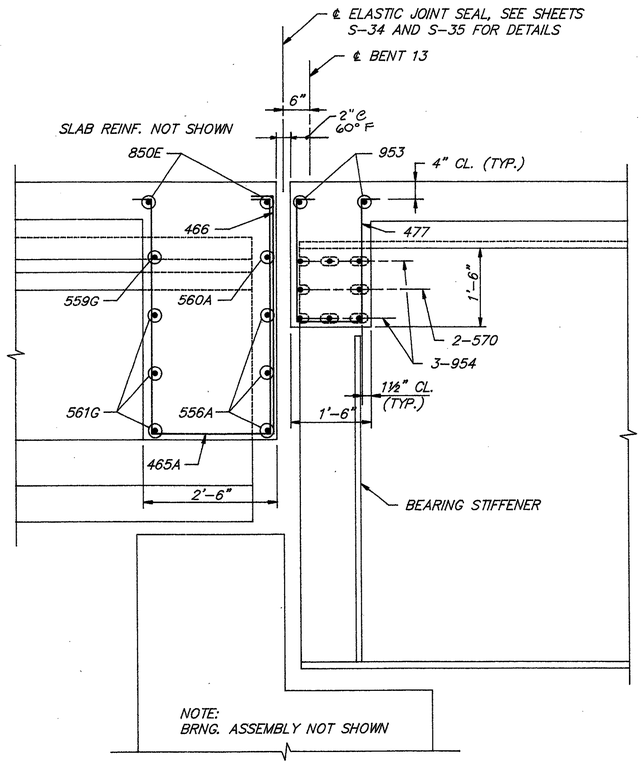

1 S-20 SECTION ¾" = 1'-0"

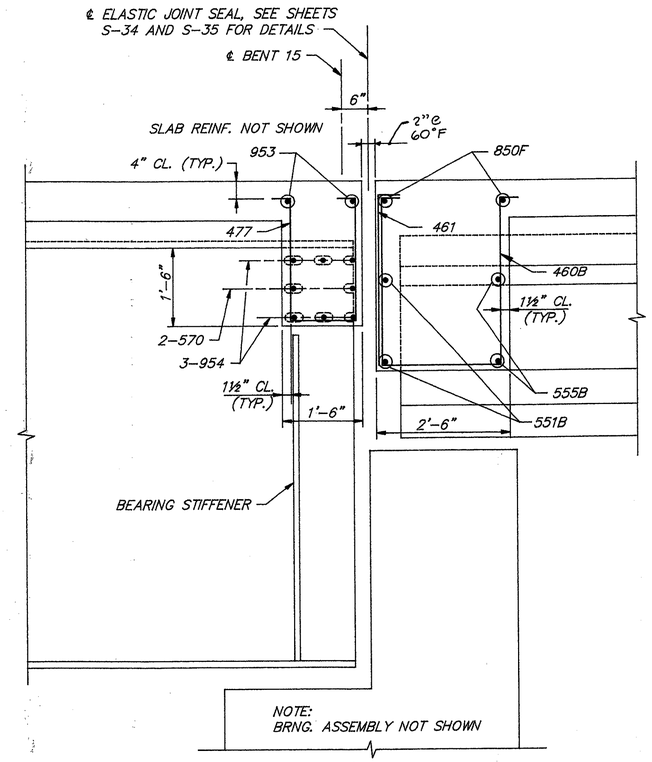

2 S-20 SECTION ¾" = 1'-0"

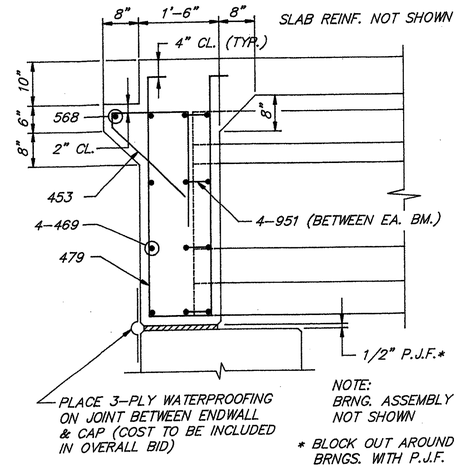

3 S-20 SECTION ¾" = 1'-0"

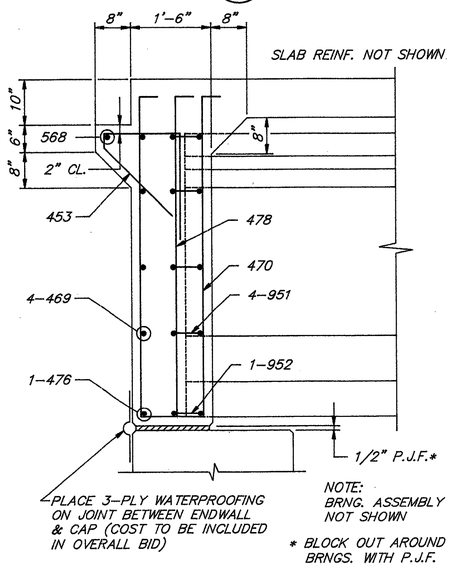

4 S-20 SECTION ¾" = 1'-0"

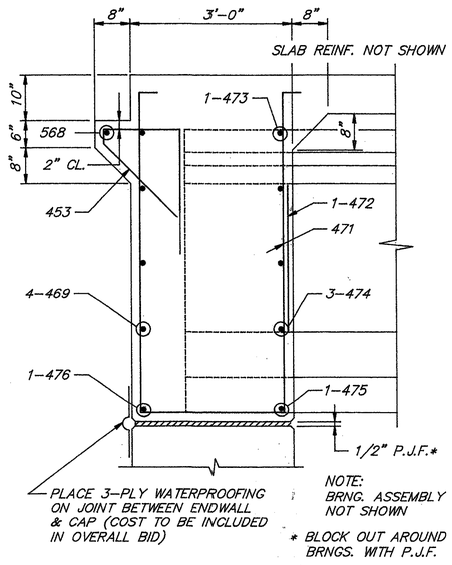

5 S-20 SECTION ¾" = 1'-0"

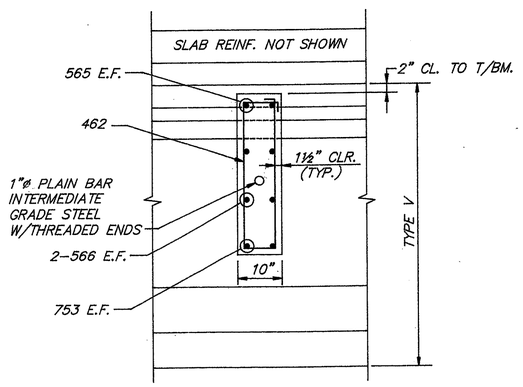

6 S-20 SECTION ¾" = 1'-0"

FOR INFORMATION ONLY

BRIDGE NO. 3A

RS & H
Reynolds, Smith and Hills
Architects – Engineers – Planners, Incorporated
Atlanta, Georgia

GEORGIA
DEPARTMENT OF TRANSPORTATION
HIGHWAY DIVISION – BRIDGE DESIGN

SUPERSTRUCTURE SECTIONS

GA. 400 N.B. OVER I-85

FULTON COUNTY IXAF-000S(3) CT.4

SCALE: AS SHOWN DATE: OCT. 1989

DESIGNED C.L. DRAWN HUBIE CHECKED C.L. D.O.T. LIASON R.T.A. REVIEWED RJS/BDM APPROVED PVL

BRIDGE SHEET S-20 OF 62