| STATE | PROJECT NUMBER | SHEET NO. | TOTAL SHEETS |
|---|---|---|---|
| GA | IXAF-0005(1) | 536 | 934 |

REV 10-13-89
REV 11-6-89

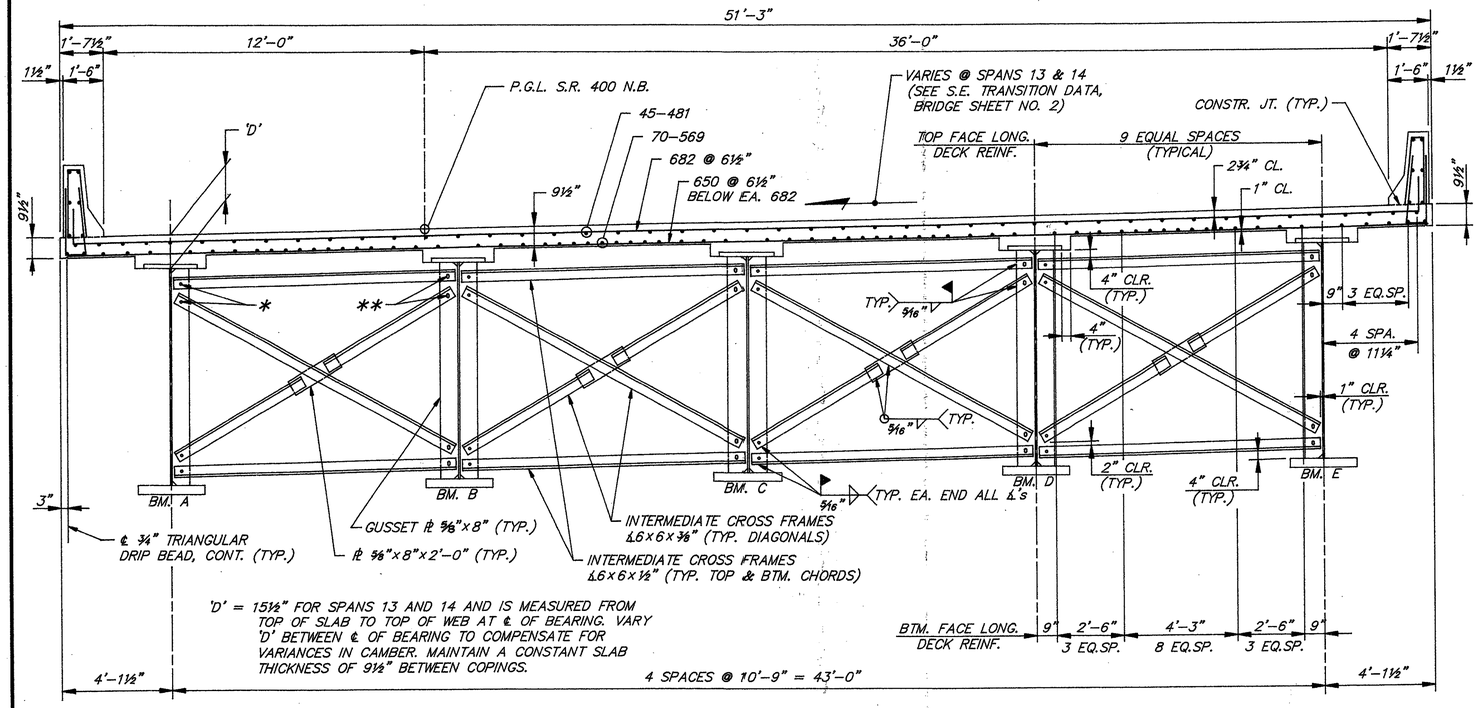


## TYPICAL DECK SECTION AT POSITIVE MOMENT REGIONS – SPANS 13 AND 14

⅜" = 1'-0" (LOOKING AHEAD)

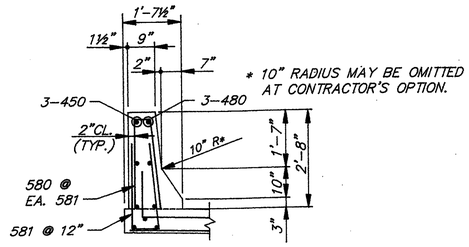


## TRAFFIC BARRIER REINFORCING

½" = 1'-0"

* – 13/16"ø HOLES IN INTERMEDIATE CROSS FRAMES OR BEARING DIAPHRAGMS AND GUSSET PLATES OR BEARING STIFFENERS FOR ¾"ø ERECTION BOLTS AT CONTRACTOR'S OPTION.

** – 13/16"ø HOLES IN INTERMEDIATE CROSS FRAMES OR BEARING DIAPHRAGMS AND 13/16"ø x 2" SLOTTED HOLES IN GUSSET PLATES OR BEARING STIFFENERS FOR ¾"ø ERECTION BOLTS AT CONTRACTOR'S OPTION.

NOTES – WELD ALL INTERMEDIATE CROSS FRAMES AND BEARING DIAPHRAGMS BEFORE POURING SLAB, EXCEPT THOSE DENOTED ON FRAMING PLAN W/ ***.

NOTE: EPOXY COATED BARS – ALL REINFORCEMENT WITH BAR IDENTIFICATION OF _80 AND ABOVE SHALL BE EPOXY COATED AND TYPICALLY LOCATED NEAR TOP OF DECK (I.E. 480, 481, 582, ETC.)

⚠ SEE BR. SHEET S-26 FOR BEARING STIFFENER CONNECTION DETAILS.
⚠ SEE BR. SHEET S-27 FOR GUSSET PL CONNECTION DETAILS.

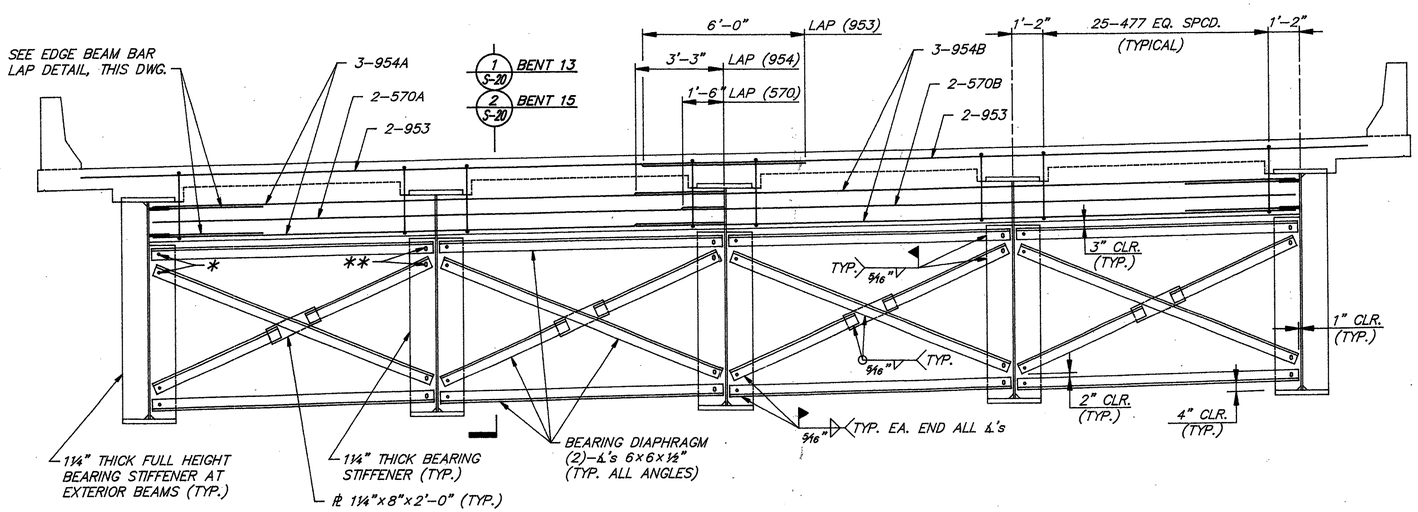


## EDGE BEAM ELEVATION – SPANS 13 AND 14

⅜" = 1'-0" (LOOKING AHEAD)

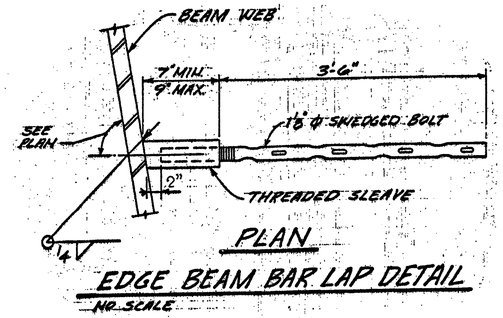


COST FOR SUPPLYING AND INSTALLING SLEEVE AND BOLT (EDGE BEAM BAR LAP) SHALL BE INCLUDED IN PRICE BID FOR LUMP STRUCTURAL STEEL.

FOR INFORMATION ONLY

BRIDGE NO. 3A

RS&H
Reynolds, Smith and Hills
Architects – Engineers – Planners, Incorporated
Atlanta, Georgia

GEORGIA
DEPARTMENT OF TRANSPORTATION
HIGHWAY DIVISION – BRIDGE DESIGN

SUPERSTRUCTURE DETAILS (SPANS 13 & 14)

GA. 400 N.B. OVER I-85
FULTON COUNTY IXAF-0005(3) CT.4

SCALE: AS SHOWN DATE: OCT. 1989

| REVISIONS | BY | DATE |
|---|---|---|
| ADD NOTES | KYA | 10-13-89 |

DESIGNED G.L. CHECKED G.L.
DRAWN HUBIE D.O.T. LIASON R.T.A.
REVIEWED RJS/BDM
APPROVED PVC

BRIDGE SHEET S-15 OF 62

| STATE | PROJECT NUMBER | SHEET NO. | TOTAL SHEETS |
|---|---|---|---|
| GA | CM-056-1(56) | 15 | 151 |