STATE	PROJECT NUMBER	SHEET NO.	TOTAL SHEETS
GA	IXAF-000S(1)	535	934

REV 10-13-89

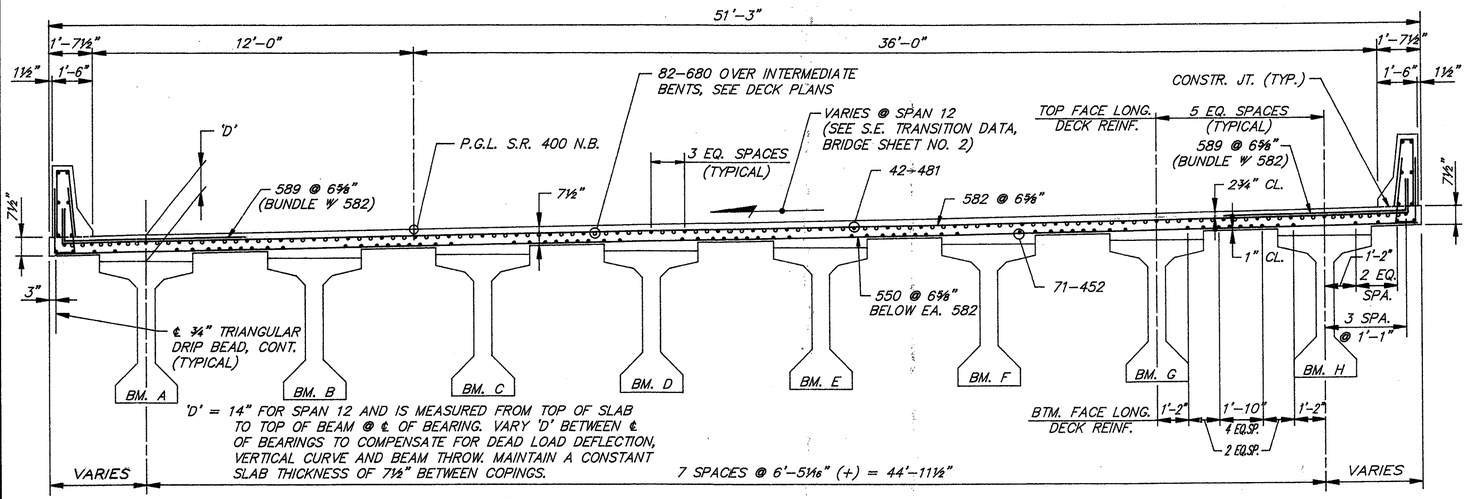

TYPICAL DECK SECTION – SPAN 12

⅜" = 1'-0" (LOOKING AHEAD)

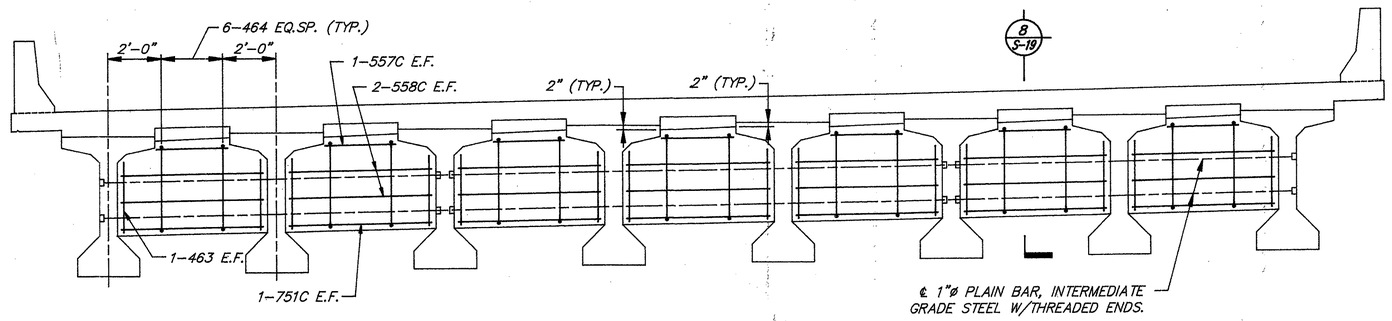

DIAPHRAGM ELEVATION – SPAN 12

⅜" = 1'-0" (LOOKING AHEAD)

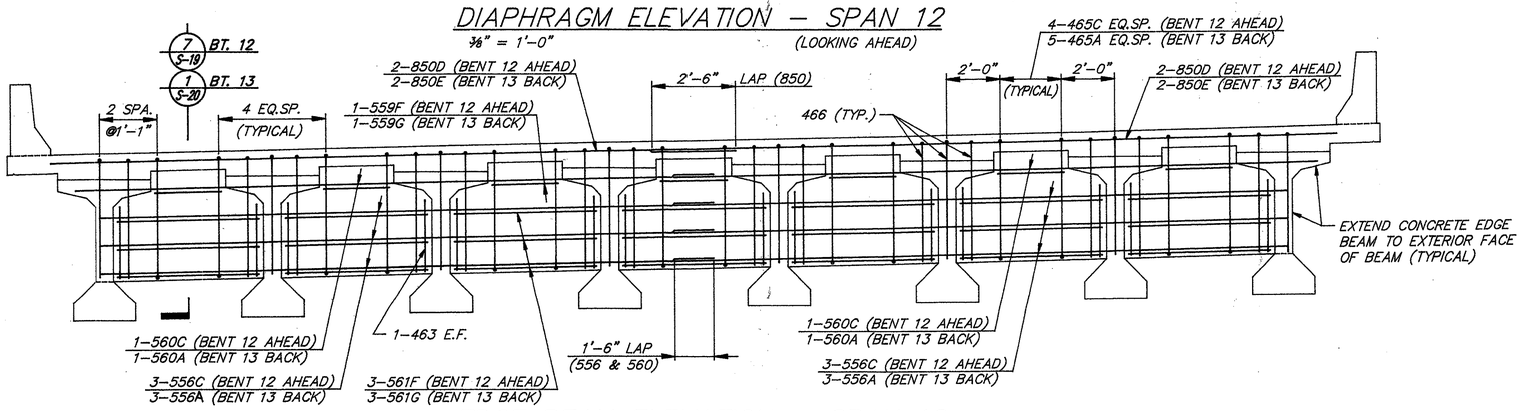

EDGE BEAM ELEVATION – SPAN 12

⅜" = 1'-0" (LOOKING AHEAD)

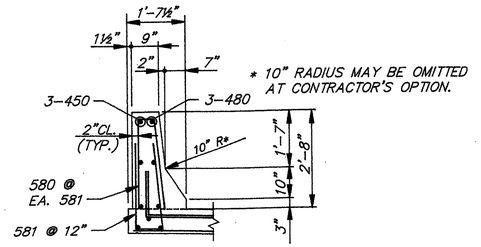

* 10" RADIUS MAY BE OMITTED AT CONTRACTOR'S OPTION.

TRAFFIC BARRIER REINFORCING

½" = 1'-0"

NOTE: EPOXY COATED BARS – ALL REINFORCEMENT WITH BAR IDENTIFICATION OF _80 AND ABOVE SHALL BE EPOXY COATED AND TYPICALLY LOCATED NEAR TOP OF DECK (I.E. 480, 481, 582, ETC.)

FOR INFORMATION ONLY

BRIDGE NO. 3A

RS+H
Reynolds, Smith and Hills
Architects – Engineers – Planners, Incorporated
Atlanta, Georgia

GEORGIA
DEPARTMENT OF TRANSPORTATION
HIGHWAY DIVISION – BRIDGE DESIGN

SUPERSRUCTURE DETAILS (SPAN 12)

GA. 400 N.B. OVER I-85

FULTON COUNTY IXAF-000S(3) CT.4

SCALE: AS SHOWN DATE: OCT. 1989

DESIGNED CL DRAWN HUBIE CHECKED CL D.O.T. LIASON R.T.A. REVIEWED RJG/BDM APPROVED PVL

BRIDGE SHEET S-14 OF 62

DATE | REVISIONS | BY

STATE GA. PROJECT NUMBER CH-056-1(56) PHASE 1 SHEET NO. 151 TOTAL SHEETS