STATE	PROJECT NUMBER	SHEET NO.	TOTAL SHEETS
GA.	CSSTP-0006-00(900)	901	1415

VOID

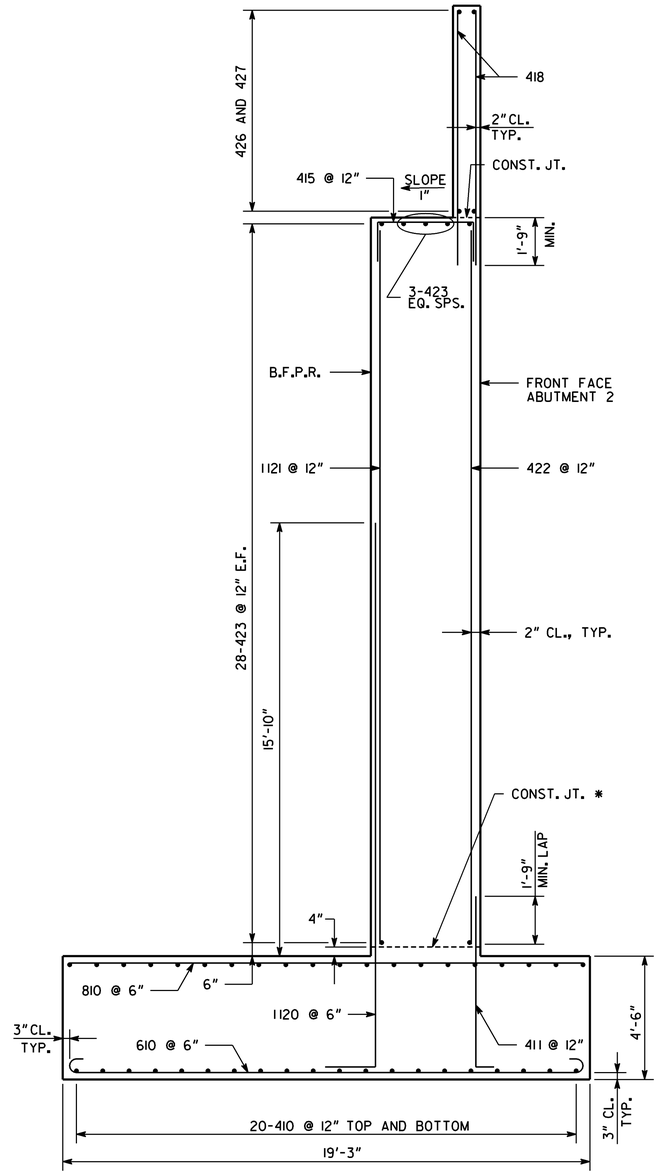

SECTION B-B

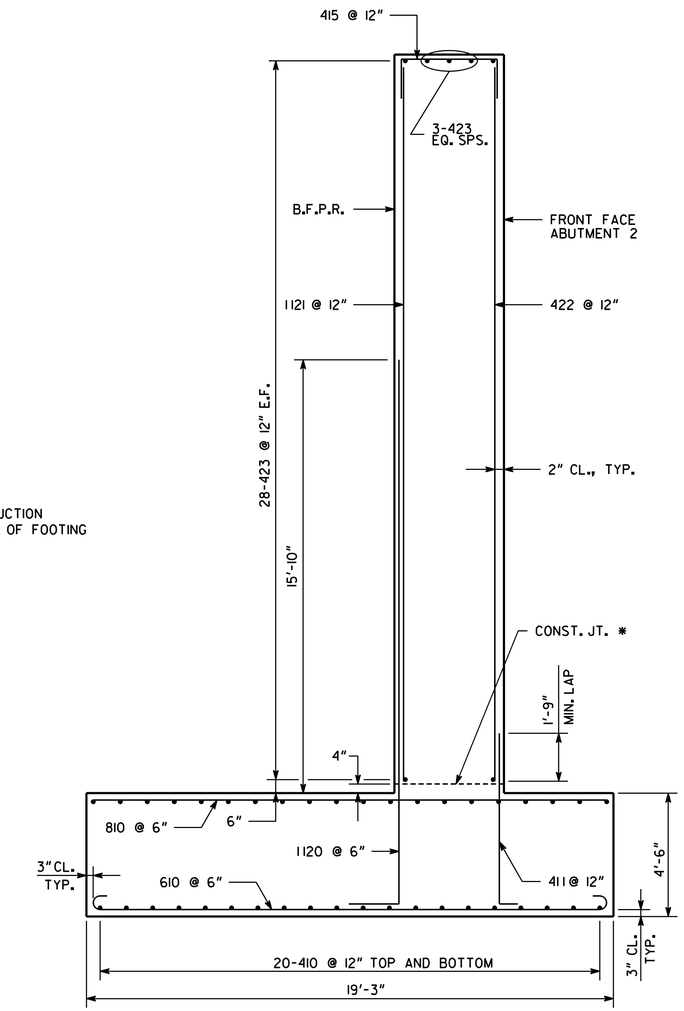

SECTION A-A

* AT CONTRACTOR'S OPTION CONSTRUCTION JOINT MAY BE RELOCATED TO TOP OF FOOTING

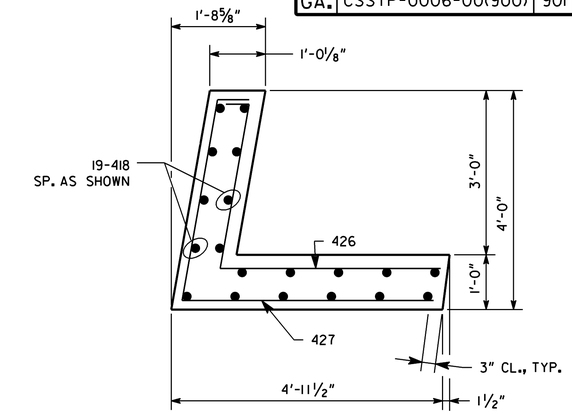

SECTION E-E

SCALE: ¾" = 1'-0"

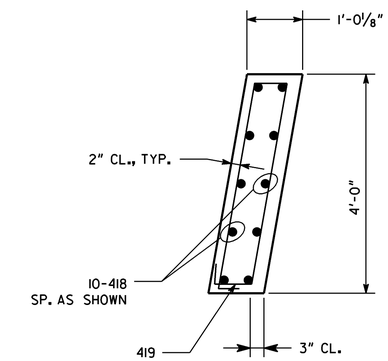

SECTION D-D

SCALE: ¾" = 1'-0"

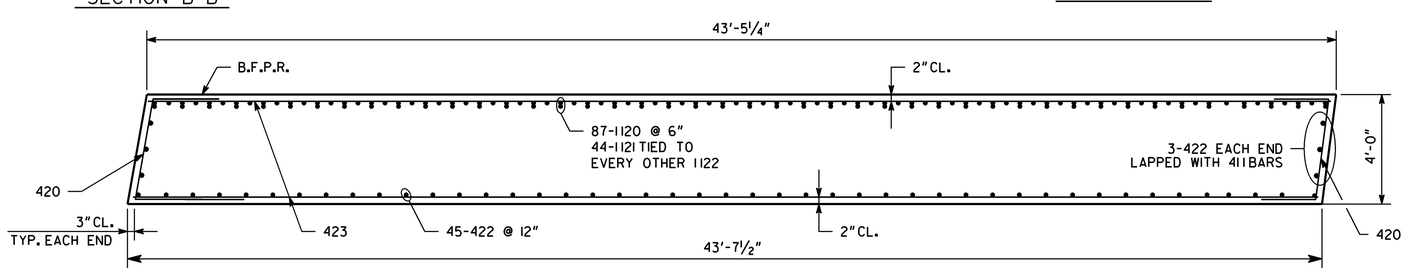

SECTION C-C

NOTE:

MAINTAIN 2" CL. ON ALL REINFORCEMENT UNLESS OTHERWISE NOTED.

BRIDGE NO. 1

URS
400 NORTHPARK TOWN CENTER
1000 ABERNATHY ROAD, N. E.
SUITE 900
ATLANTA, GA 30328
TEL: (678) 808-8800
FAX: (678) 808-8400

GEORGIA
DEPARTMENT OF TRANSPORTATION
ENGINEERING DIVISION-OFFICE OF BRIDGES AND STRUCTURES

ABUTMENT 2 DETAILS

CS 680 (EAST STRICKLAND ST) OVER SR 92

DOUGLAS COUNTY CSSTP-0006-00(900)

DATE	REVISIONS	BY

SCALE: ⅜" = 1'-0" FEBRUARY 2014

DESIGNED CAV	CHECKED RSC	REVIEWED DLC/WMD
DRAWN CAV	DESIGN GROUP YSK	APPROVED BFR

DRAWING NO. 35-011

BRIDGE SHEET 11 OF 13

1 INCH WHEN PRINTED FULL SIZE

X.DGN

P:\1528\1295\WORKING FILES\BRIDGE\FINAL\BR_01\DGN\1295_BR111_EB2B.dgn
2/3/2014 11:18:43 AM george_manning