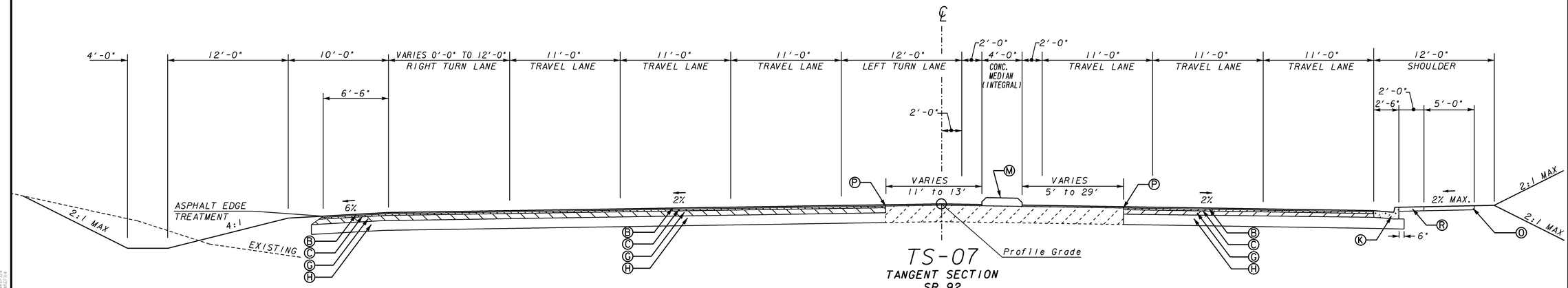

TS-07

TANGENT SECTION
SR 92

APPLIES TO STA 167+22.00.00 TO 170+34.00

NOTE: LOCATION OF DITCH VARIES. SEE PLAN AND CROSS SECTION SHEET FOR DETAILS.

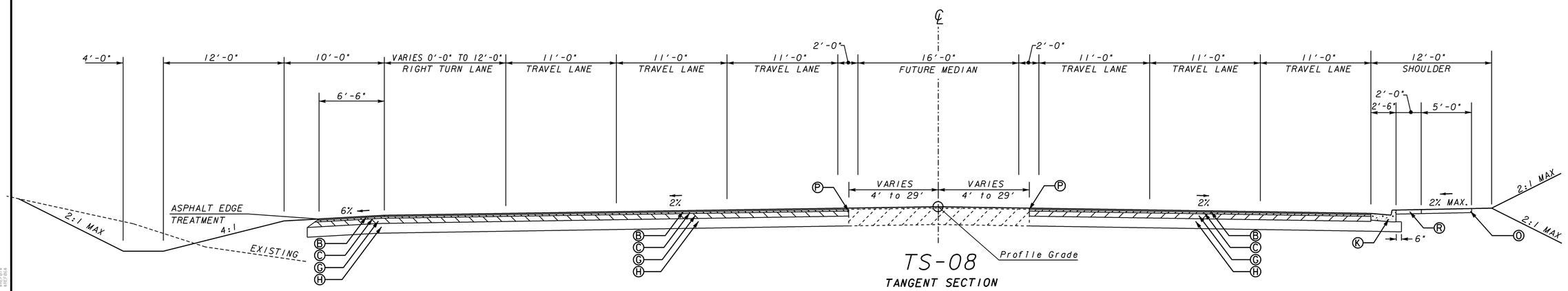

TS-08

TANGENT SECTION
SR 92

APPLIES TO STA 170+34.00.00 TO 175+50.00

NOTE: LOCATION OF DITCH VARIES. SEE PLAN AND CROSS SECTION SHEET FOR DETAILS.

NOTE: SEE CONSTRUCTION DETAIL P-7 FOR ALL ASPHALT EDGE TREATMENTS.

REQUIRED PAVEMENT

- (A) RECYCLED ASPH CONC 12.5 mm SUPERPAVE, GP 2 ONLY, INCL BITUM MATL & H LIME (165 LB/SY)
- (B) RECYCLED ASPH CONC 12.5 mm SUPERPAVE, GP 2 ONLY, INCL POLYMER-MODIFIED BITUM MATL & H LIME (165 LB/SY)
- (C) RECYCLED ASPH CONC 19 mm SUPERPAVE, GPI OR 2, INCL BITUM MATL & H LIME (220 LB/SY)
- (D) RECYCLED ASPH CONC 25 mm SUPERPAVE, GPI OR 2, INCL BITUM MATL & H LIME (330 LB/SY)
- (E) RECYCLED ASPH CONC 25 mm SUPERPAVE, GPI OR 2, INCL BITUM MATL & H LIME (660 LB/SY)
- (F) RECYCLED ASPH CONC 25 mm SUPERPAVE, GPI OR 2, INCL BITUM MATL & H LIME (770 LB/SY)
- (G) RECYCLED ASPH CONC 25 mm SUPERPAVE, GPI OR 2, INCL BITUM MATL & H LIME (880 LB/SY)
- (H) GRADED AGGREGATE BASE CRS, 12", INCL MATL
- (I) GRADED AGGREGATE BASE CRS, 6", INCL MATL
- (J) RECYCLED ASPHALTIC CONCRETE LEVELING, INCL BITUM MATL AND H LIME (AS REQ'D)
- (K) 8"X30" CONC. CURB & GUTTER, GA. STD. 9032 B. TYPE 2
- (L) 8"X30" CONC. CURB & GUTTER, GA. STD. 9032 B. TYPE 7
- (M) CONCRETE INTEGRAL MEDIAN, 7.5"
- (N) ASPHALT PEDESTRIAN TRAIL
- (O) 4"CONC. SIDEWALK, GA. DETAIL A-3
- (P) PAVEMENT REINFORCING FABRIC MATERIAL (SEE DETAIL ON SHEET 5-006)
- (R) STAMPED CONCRETE, 4" THK., (SEE DETAIL ON SHEET 5-007)

URS
400 NORTHPARK TOWN CENTER
1000 ABERNATHY ROAD, N.E., SUITE 900
ATLANTA, GEORGIA 30328
TEL: (678) 808-8800 FAX: (678) 808-8400

GEORGIA DEPARTMENT OF TRANSPORTATION

NOT TO SCALE

REVISION DATES

STATE OF GEORGIA
DEPARTMENT OF TRANSPORTATION
OFFICE: PROGRAM DELIVERY

TYPICAL SECTIONS

SR 92 RELOCATION & WIDENING

DRAWING No. 05-004