STATE	PROJECT NUMBER	SHEET NO.	TOTAL SHEETS
GA.	NH-7141-00(100)	50	334

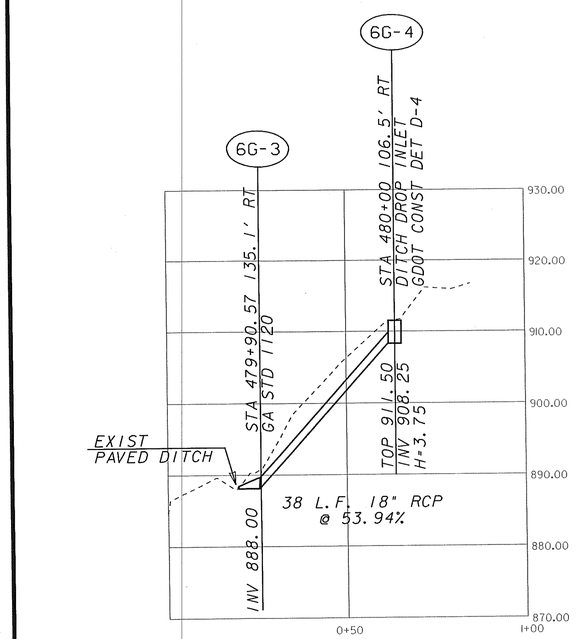

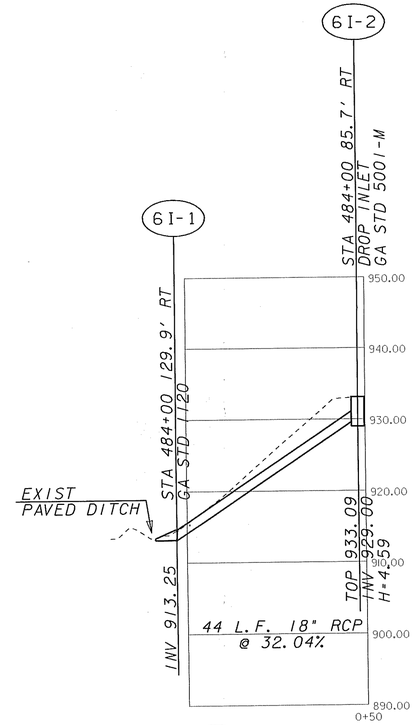

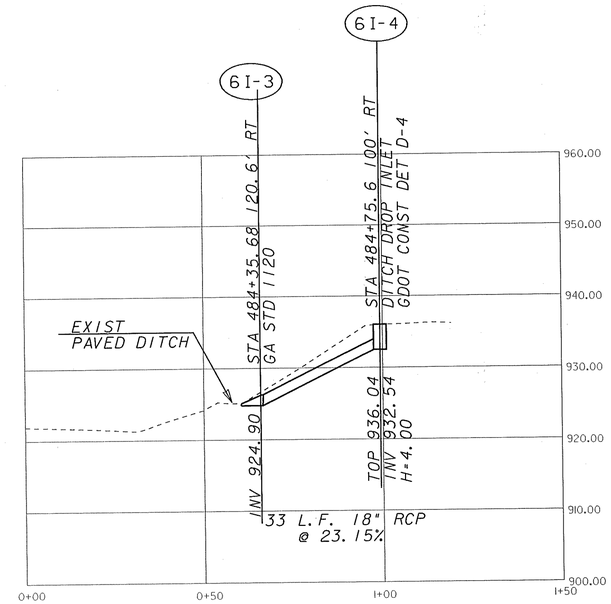

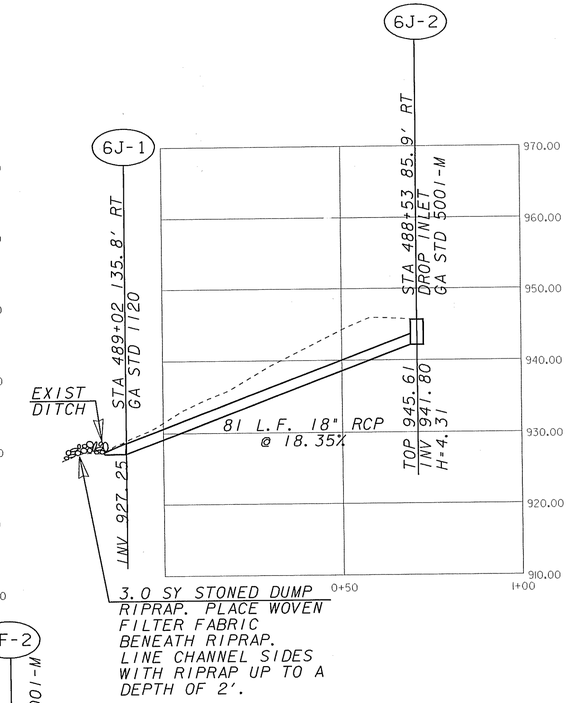

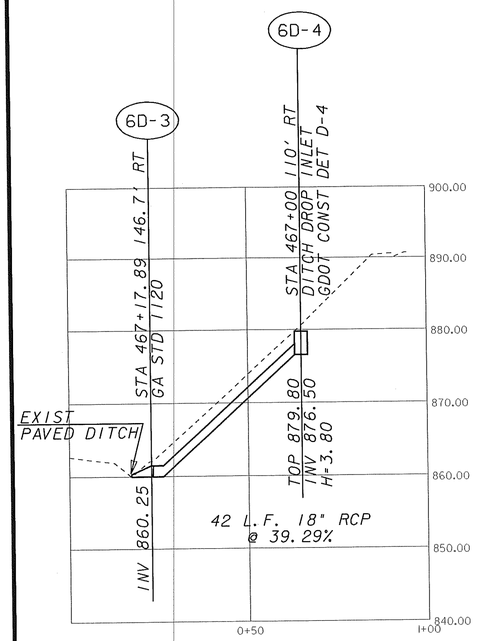

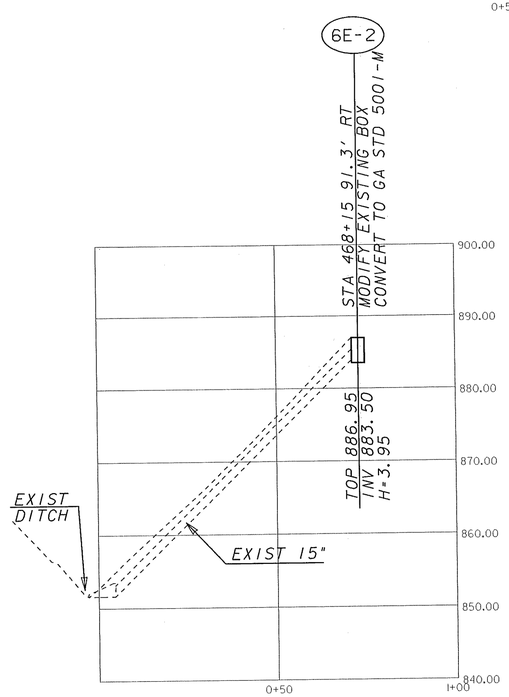

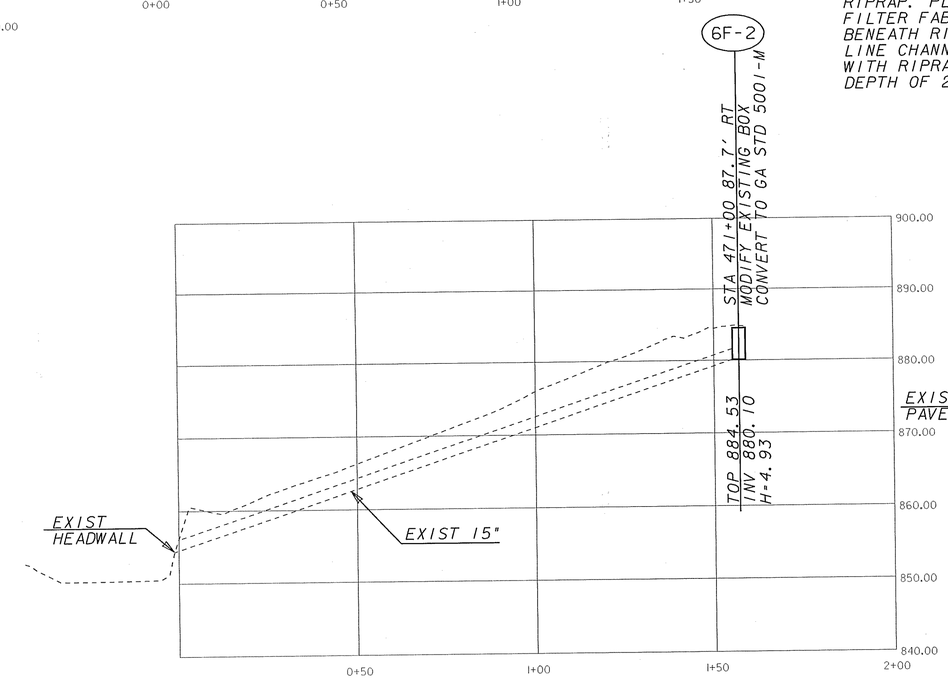

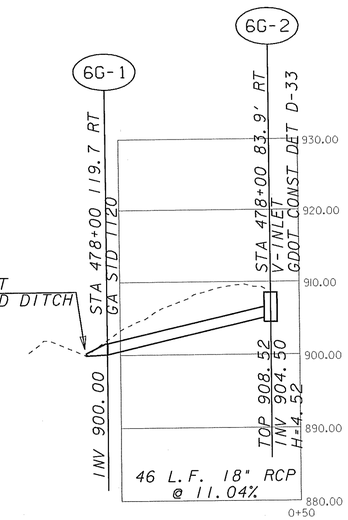

SCALES:
VERTICAL 1" = 10'
HORIZONTAL 1" = 20'

GREENHORNE & O' MARA
2211 NEWMARKET PARKWAY
SUITE 104
MARIETTA, GEORGIA 30067
PHONE: (770) 988-9555
G&O PROJECT NO. 0094/WO 010

DATE	REVISIONS	DATE	REVISIONS

GEORGIA
DEPARTMENT OF TRANSPORTATION
DRAINAGE PROFILES
PROJECT: NH-7141-00(100)
COUNTY: DEKALB
DATE: 06-21-02
DRAWING 14-03