COUNTY	PROJECT NUMBER	SHEET NO.	TOTAL SHEETS
HENRY, CLAYTON & DEKALB	CM-675-1(1)	77	112

STATE	PROJECT NUMBER	SHEET NO	TOTAL SHEETS
GA.	I-ID-675-1(137)	122	591

Resub 4/10/83

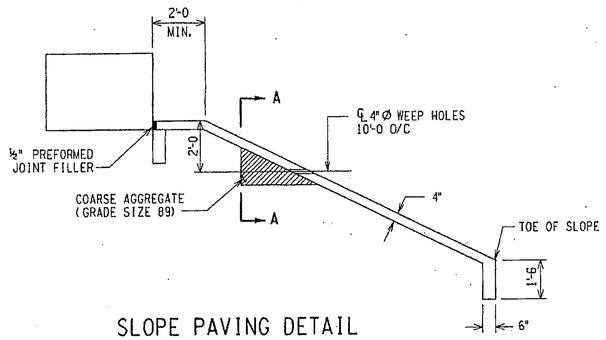

SLOPE PAVING DETAIL

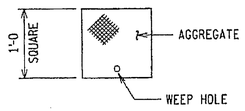

A-A

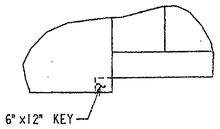

B-B

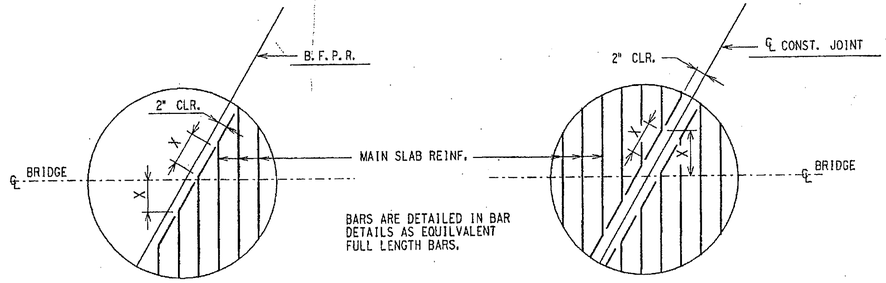

AT B.F.P.R. AT CONSTRUCTION JOINT

BAR BENDING DETAILS AT SKEWED JOINTS

NOTE:
BARS TO BE BUNDLED SHALL BE BUNDLED VERTICALLY.

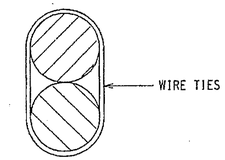

BUNDLING DETAIL

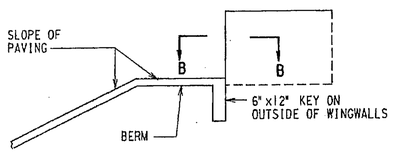

SLOPE PAVING DETAILS AT OUTSIDE WINGWALLS

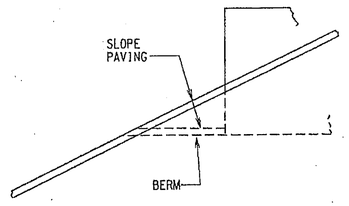

SLOPE PAVING DETAIL BETWEEN DOUBLE BRIDGES

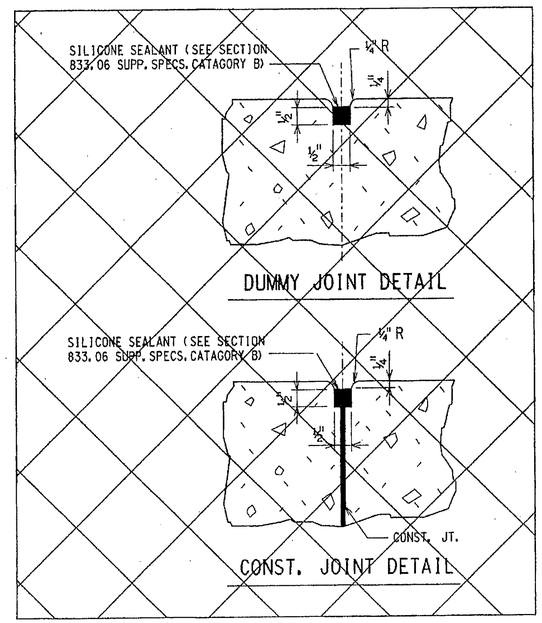

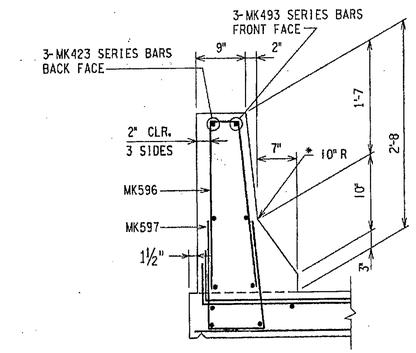

BARRIER DETAIL

* AT CONTRACTORS OPTION 10" R MAY BE REPLACED BY STRAIGHT INTERSECTING SLOPES.
MK596 AND MK597 BARS SHALL BE SPACED AT TWICE THE MAIN SLAB REINF. SPACING.

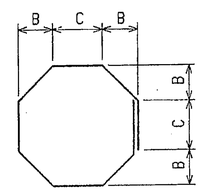

BAR TYPE 60

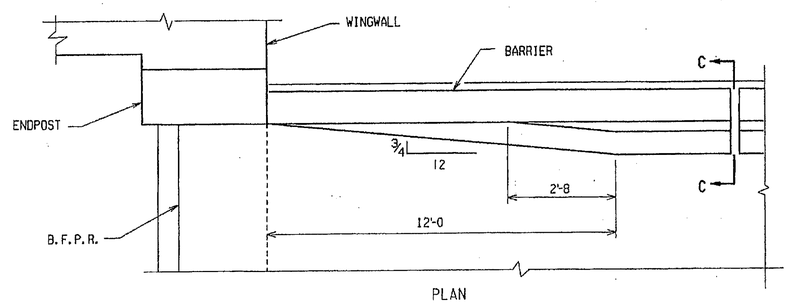

PLAN

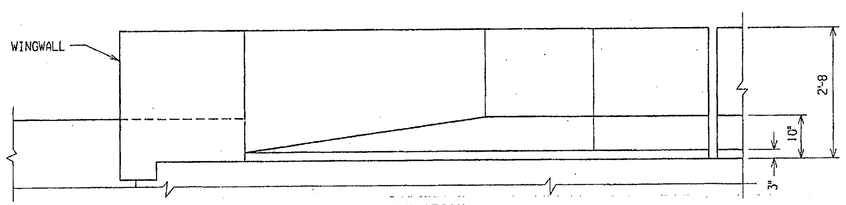

ELEVATION

BARRIER TRANSITION DETAILS

(SKEW NOT SHOWN)

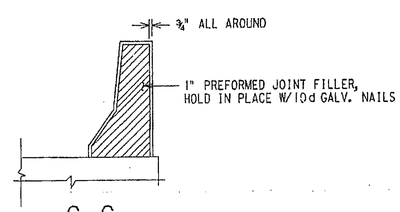

C-C

NOTE: EXP. JOINTS SHALL BE PLACED IN BARRIER AS SHOWN ON BRIDGE SHEET 2 OF 12.

BRIDGE NO. 8LT & 8RT

SIMONS · EASTERN COMPANY
ATLANTA, GEORGIA

GEORGIA
DEPARTMENT OF TRANSPORTATION
HIGHWAY DIVISION-BRIDGE DESIGN

MISCELLANEOUS DETAILS
I-675 OVER SOUTHERN RAILWAY
DEKALB COUNTY I-675-1(137)

SCALE: NO SCALE JAN. 19, 1983

DESIGNED E. L. MARSHALL
DRAWN R. H. FLETCHER
TRACED
CHECKED E. L. MARSHALL
REVIEWED
APPROVED

DATE | REVISIONS | BY

FILE 203
SIMECO JOB NO. 1947
BRIDGE SHEET 7 OF 12

CAD FILENAME: BU8MD U.I.C.: 156,25