COUNTY	PROJECT NUMBER	SHEET NO.	TOTAL SHEETS
Clayton, Dekalb, Henry	CM000-0005-01(001)	102	112

FILL SECTION

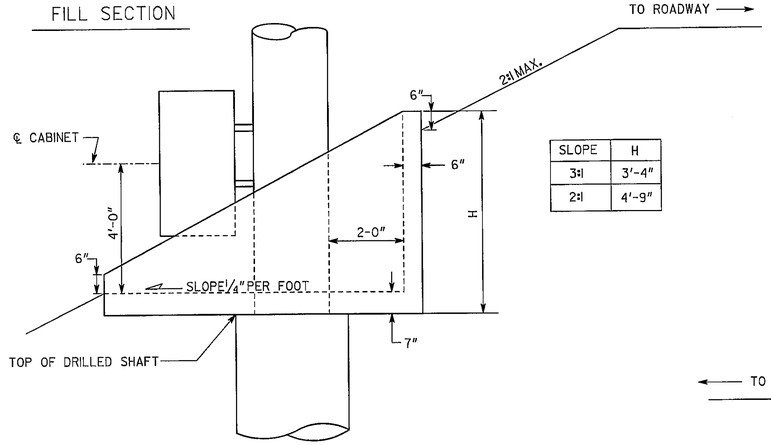

SLOPE	H
3:1	3'-4"
2:1	4'-9"

CUT SECTION

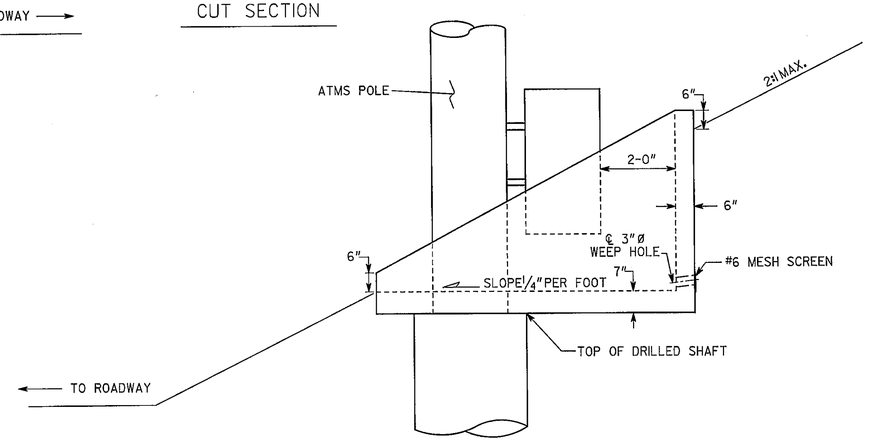

DESIGN DATA

SPECIFICATIONS ---------- AASHTO 2002

CONCRETE ---------- CLASS A, f'_c = 3,000 PSI

REINFORCEMENT STEEL ---------- GRADE 60, f_y = 60,000 PSI

DESIGN SOIL PRESSURE ---------- 3 KSF

COHESION ---------- 0

ANGLE OF INTERNAL FRICTION ---------- 28°

UNIT WEIGHT ---------- 110 PCF

COEFFICIENT OF SLIDING FRICTION ---------- 0.45

GENERAL NOTES

SPECIFICATIONS - GEORGIA STANDARD SPECIFICATIONS, 2001 EDITION, AS MODIFIED BY CONTRACT DOCUMENTS.

REINFORCING STEEL - ALL REINFORCING STEEL SHALL BE PLACED AND TIED IN ACCORDANCE WITH THE GEORGIA DOT SPECIFICATIONS. WELDING OF REINFORCING STEEL WILL NOT BE PERMITTED.

FINISH - EXPOSED SURFACES OF THE WALL SHALL RECEIVE A TYPE III FINISH.

CONCRETE COVER - MAINTAIN 3" COVER ON ALL FOOTING REINFORCING AND 2" COVER ON ALL STEM REINFORCING.

INCIDENTAL ITEMS - COST INCIDENTAL TO THE WORK THAT IS NOT SPECIFICALLY COVERED BY THE GEORGIA STANDARD SPECIFICATIONS, SUPPLEMENTAL SPECIFICATIONS AND/OR SPECIAL PROVISIONS SHALL BE INCLUDED IN THE OVERALL BID SUBMITTED. THIS INCLUDES THE COST OF JOINT FILLERS, AND OTHER INCIDENTAL ITEMS NECESSARY TO COMPLETE THE WORK.

* -FIELD CUT TO CLEAR ATMS POLE

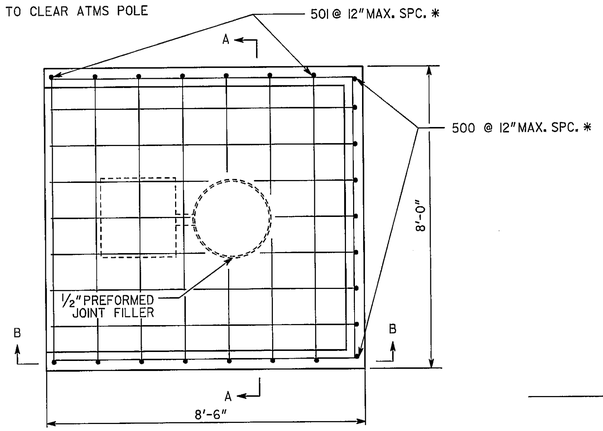

PLAN

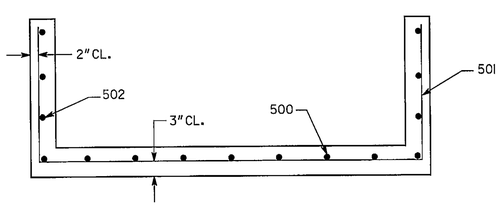

SECTION A-A

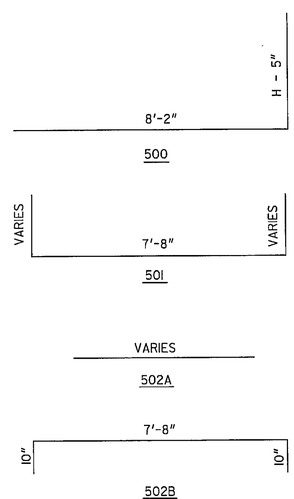

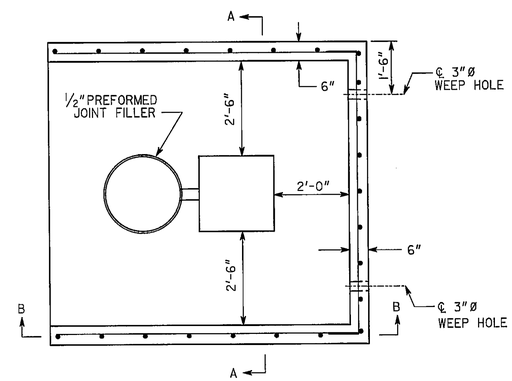

PLAN

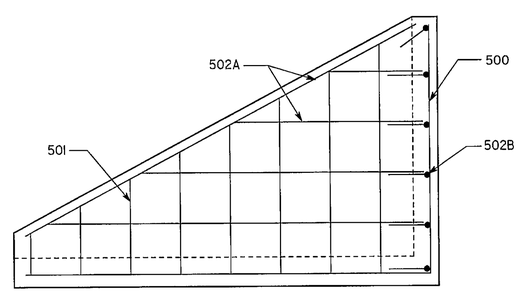

SECTION B-B

SUMMARY OF QUANTITIES

PAY ITEM NUMBER	QUANTITY	UNIT	PAY ITEM
500-3701	3	CY	CLASS A CONCRETE, RETAINING WALL
511-1000	320	LB	BAR REINFORCING STEEL

NOTE: QUANTITIES SHOWN ASSUME A 2:1 SLOPE

GEORGIA
DEPARTMENT OF TRANSPORTATION

- NO SCALE -

REVISION DATES		
06/01/2005		

STATE OF GEORGIA
DEPARTMENT OF TRANSPORTATION
OFFICE: BRIDGE DESIGN
ATMS PLANS
PLATFORM DETAILS
ITS-05

DESIGNED DDF | CHECKED SWW | REVIEWED HSL
DRAWN DDF | DESIGN GROUP SWW | APPROVED PLV

DRAWING No. 28-

...\atmsplt1c-36_platform.dgn 4/12/2007 7:44:25 AM